Wolfspeed™ | A CREE COMPANY

SiC Enabling EV Applications

- SiC State of the Art
- SiC System Impact
- SiC Maturity

Guy Moxey Dec 2018

Adoption of SiC into Various Applications – It's all around

PV Inverters

Shipping in high volume

- MOSFETs
- Diodes
- Modules

Battery Chargers for EV

Shipping in high volume

- MOSFETs
- Diodes
- Modules

Server Power Supply

Shipping in high volume

- MOSFETs in evaluation
- Diodes shipping in high volume

Traction

Shipping in volume

- SiC Modules

Automotive SiC Has Dramatic Growth Potential…

SiC EV Market

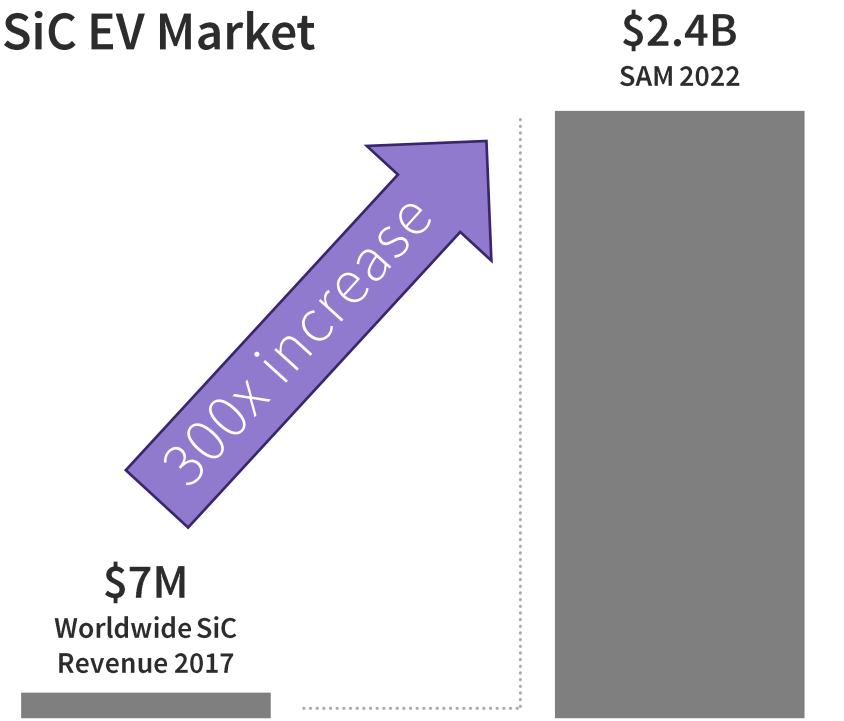

(Source: YOLE)

(Source: YOLE and company estimates)

Market Influencers

- Within ten years half of all model types manufactured will be EVs
- Policy tailwinds – emission standards are tightening
- Increasing Range
- Decreasing cost

… but ramping semiconductor capacity takes time and significant investment

Why SiC = Highest Efficiency and Power Density

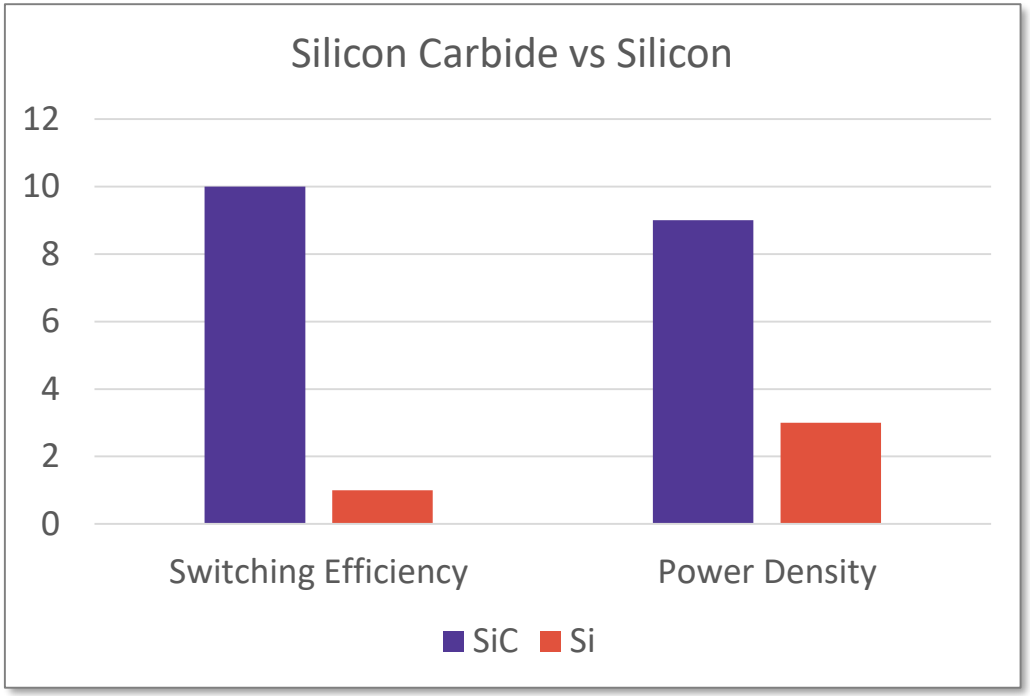

SiC Characteristics

- Lower Resistance
- Higher Frequency
- Higher Operating Temperature

System Benefits

- Smaller Size / Higher Density
- Smaller passive components
- Simpler Cooling

What a difference a year makes for Automotive SiC…

Cumulative volume of car companies with SiC-based inverter prototypes for '22-'25 launch

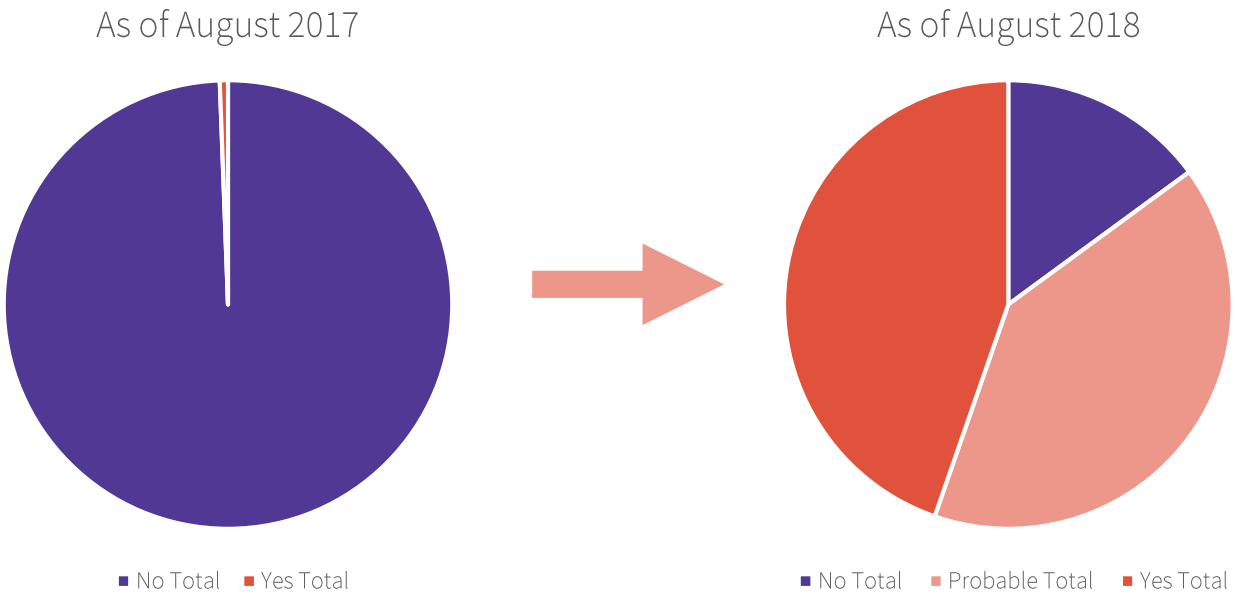

Focused Applications: Automotive

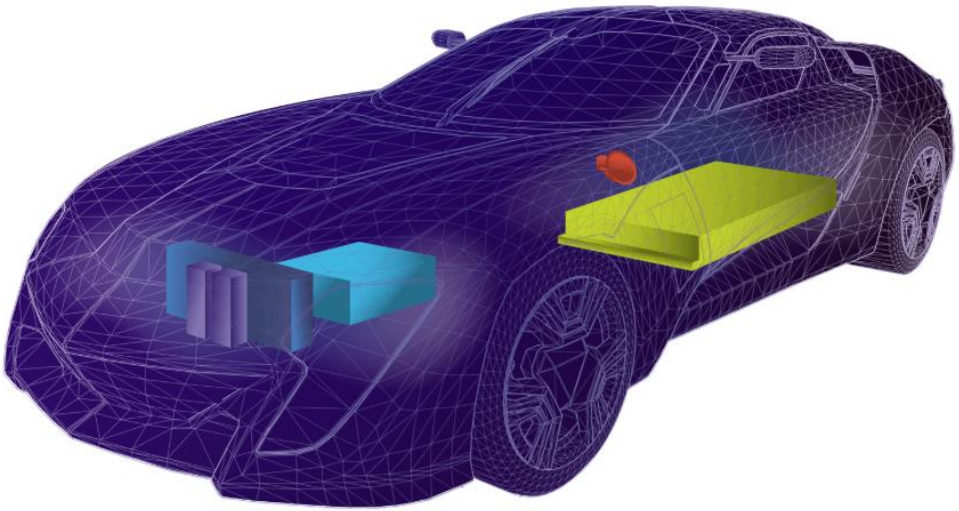

On-Board Chargers
- Lower system cost than Si
- 650-900V SiC MOSFETs

DC/DC Converters
- Battery voltage to bus voltage
- Up to 100kHz
- Compact, efficient, lightweight

Drive Train Inverters
- Lower on-state losses
- Reduce battery and/or increase range

- Improved cost & efficiency
- MOSFETs, Diodes, & Modules

SiC Based On-Board EV Charger (OBC)

What :
- Slow charging from home / garage / office
- 6-8 hrs charge duration

Where :
- PHEV, BEV battery charging 1.6kW, 6.6kW to 22kW
- AC charge from socket to car
- Car then converts AC to DC for on board battery charging

Driving factors :
- Highest efficiency
- Highest power density (small and light weight)
- Future trends bi-directional energy flow

SiC Advantage :
- >1% higher efficiency
- ~30% smaller system size
- Lower system cost

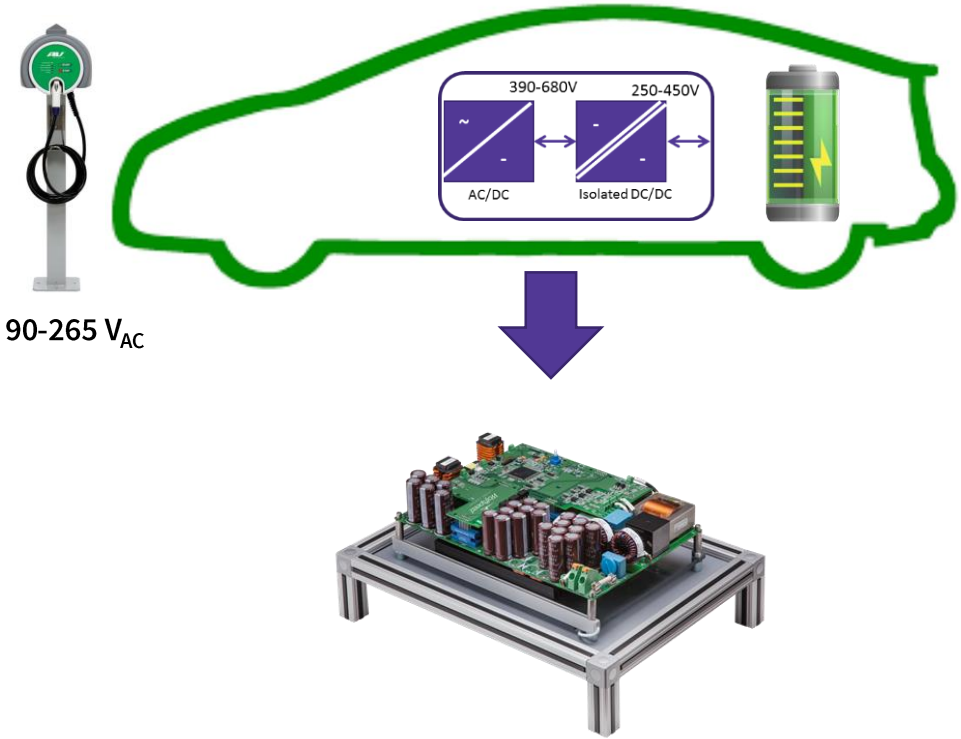

Block Diagram: Bi Directional 6.6kW Silicon Carbide OBC

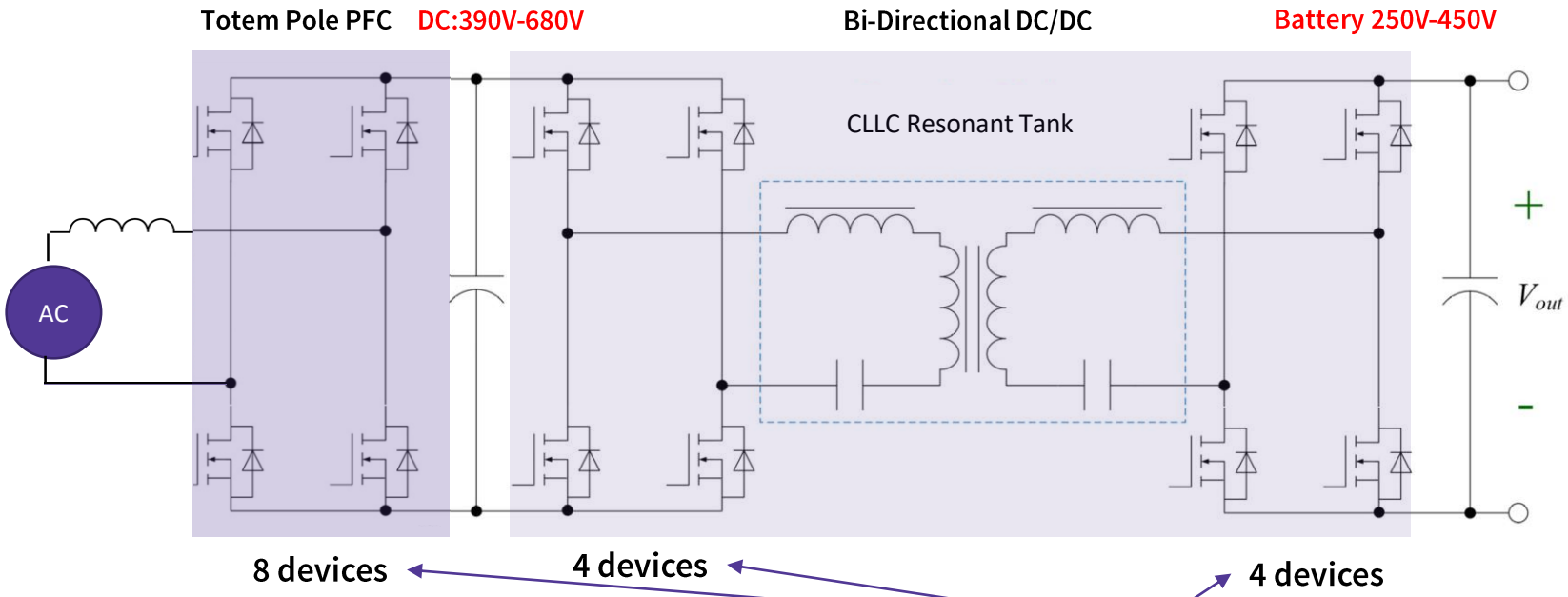

2 devices in parallel for PFC, single device for DC/DC
Uses C3M SiC MOSFET in high performance TO-247-4L package with Kelvin source
Peak System Efficiency >96%

SiC MOSFET
C3M0065100K
TO-247-4 Package

SiC: Highest Power Density = Space Savings in the Vehicle

SiC Characteristics

- Lower losses
- Higher Frequency
- Higher Efficiency

System Benefits

- Smaller Size / Higher Density
- Smaller passive components
- Simpler / smaller Cooling

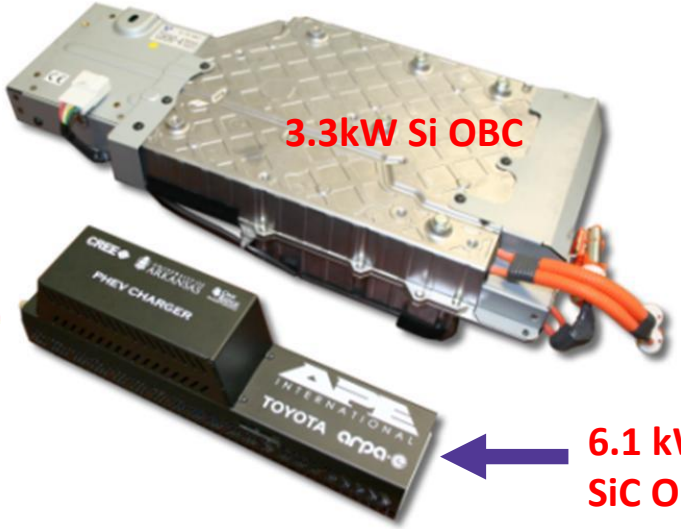

- 6.1kW On Board Charger (OBC) is **4x higher power density** than existing 3.3kW

EV Drivetrain

What :
- 90-350kW+ motor drive inverter
- Single, dual or in hub drives

Where :
- BEV powertrain
- BEV commercial vehicles

Driving factors :
- Vehicle range extension
- Battery cost reduction
- System cost reduction
- Bi-directional energy flow for regen breaking

SiC Advantage :
- ~80% lower drive loss
- ~30% smaller system size
- Lower system cost

Wolfspeed SiC enables smaller batteries and longer driving range with smaller, cooler and lighter systems

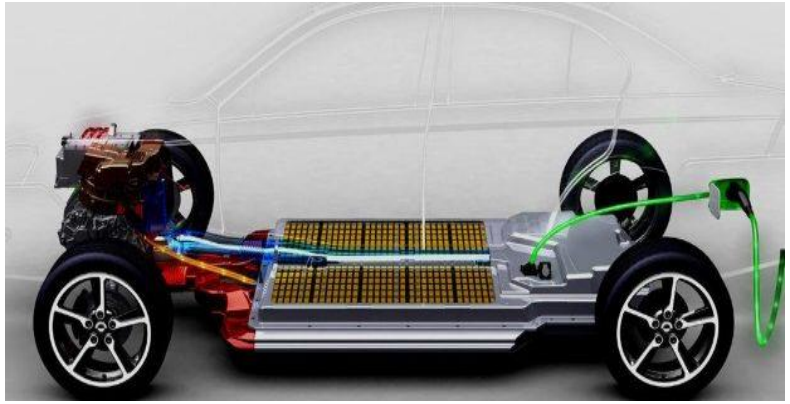

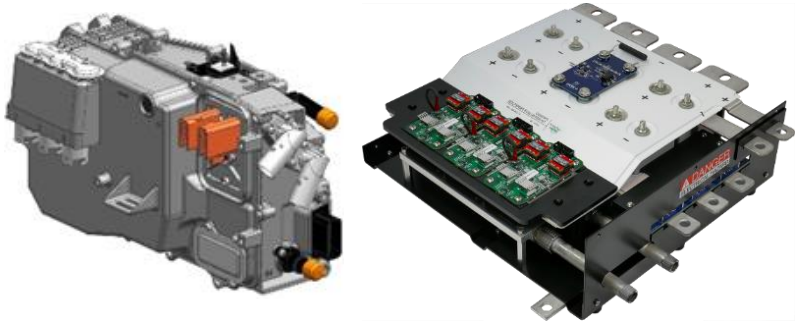

Future electric propulsion will be more efficient

The Technical Superiority of High Efficiency SiC Converters

- "Futureproof" – Viper package used to package Wolfspeed SiC MOSFET switches
- Lower switching losses than IGBT technology
- Inverter level testing shows lower losses
- Implication: more vehicle range from a given battery pack capacity

DELPHI

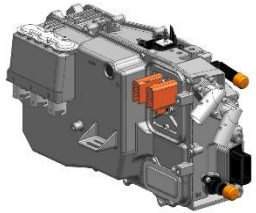

Inverter-level Loss Comparison: 650V Rated Silicon vs. Silicon Carbide

(same voltage and switching frequency)

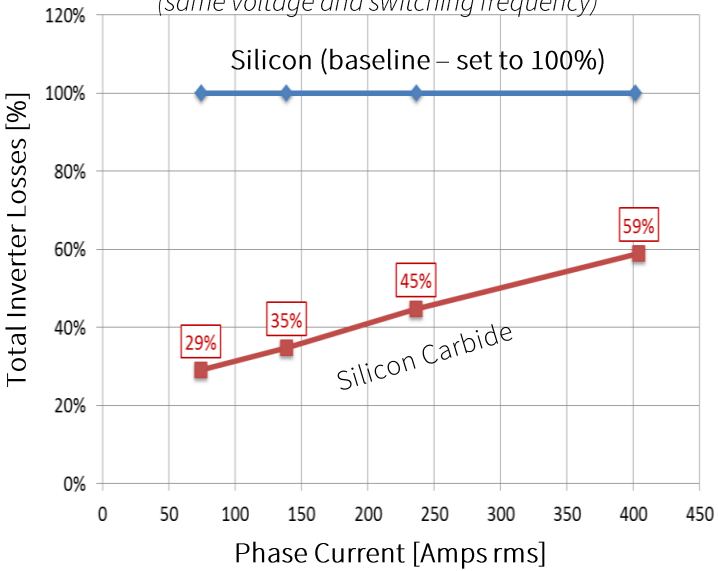

SiC higher efficiency - key to inverter loss reduction

U.S. DEPARTMENT OF ENERGY | Energy Efficiency & Renewable Energy

Ref. M. Su, et al, WiPDA 2016
Acknowledgment -- EE0006920 "88 Kilowatt Automotive Inverter with New 900 Volt Silicon Carbide MOSFET Technology"

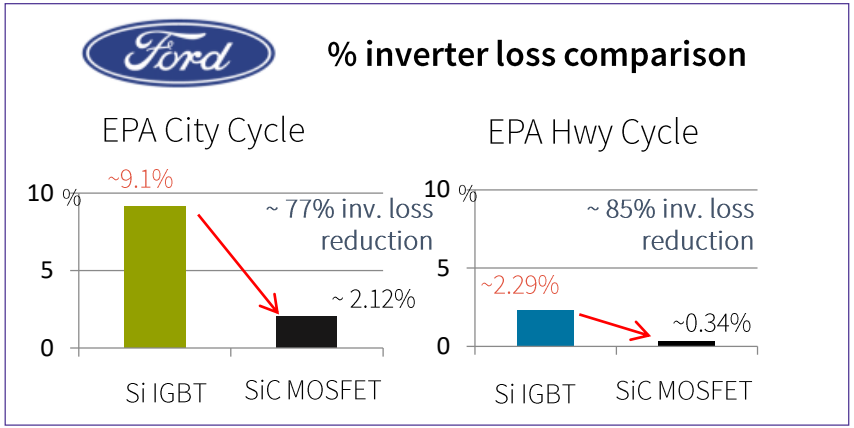

90 kW electric motor used for evaluation

- Si IGBT and Wolfspeed SiC MOSFET compared for traction drive operation
- Synchronous rectification for SiC devices, no added parallel diodes
- Compared to Si, **SiC reduces inverter losses by ~78% in electric-only drive mode for EPA metro-highway cycle**

Enables 7-10% further range for same battery size
OR
7-10% reduction in battery capability for same range

SiC MOSFETs Enable EV Drivetrains

- Highest current in industry enabled by close coupling with in-house materials quality and device design
- All Die designed and optimized for drivetrain
- “Drivetrain Menu” for in house, module house, Tier 1 or vertical OEM usage

Layouts		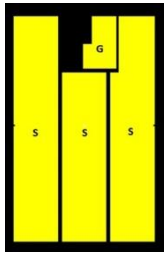	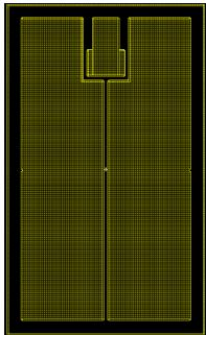 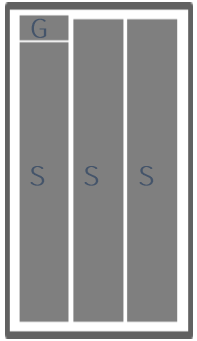 
1200 V	-		-
	100A	**110A**	**140A**
900 V	-	-	**140A**
650 V	**100A**	-	**140A**

Key features:

- Interoperable for Discrete, module or custom footprint packaging
- Selectable for optimized die attach
- Selectable for layout
- 3 voltage nodes align to battery technology selection

Wolfspeed 1200V, 13mOhm SiC MOSFET Die in ABB Power Module

pcim EUROPE

Nuremberg, 16 – 18 May 2017

ABB

Reliable interconnection technologies for high-performance operation of SiC MOSFETs

Fabian Mohn, ABB Switzerland, Ltd., Corporate Research, Switzerland, fabian.mohn@ch.abb.com
Chuniel Liu, ABB Switzerland, Ltd., Corporate Research, Switzerland, chuniel.liu@ch.abb.com
Jurgen Schuderer, ABB Switzerland, Ltd., Corporate Research, Switzerland, juergen.schuderer@ch.abb.com

- Cu plate sintered to top of die using Ag sintering at 250^{0}C, with pressure
- Wirebonds connect Cu plate (far right top and bottom) using so-called bond buffer technology
- Sintered Ag clip connection to source (left)
- 1000 cycle thermal shock passed successfully (-40 to +150°C)
- 50um Cu sheet
- More results in manuscript

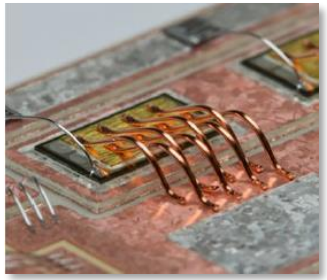

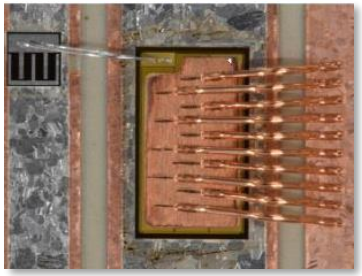

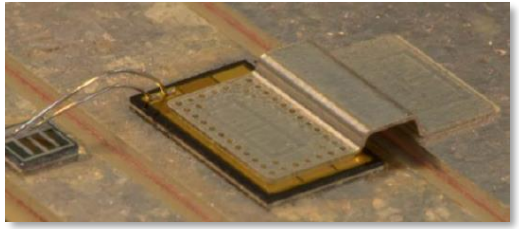

EV FAST OFF BOARD CHARGER SYSTEMS – CHARGERS FOR FAST CHARGE STATIONS

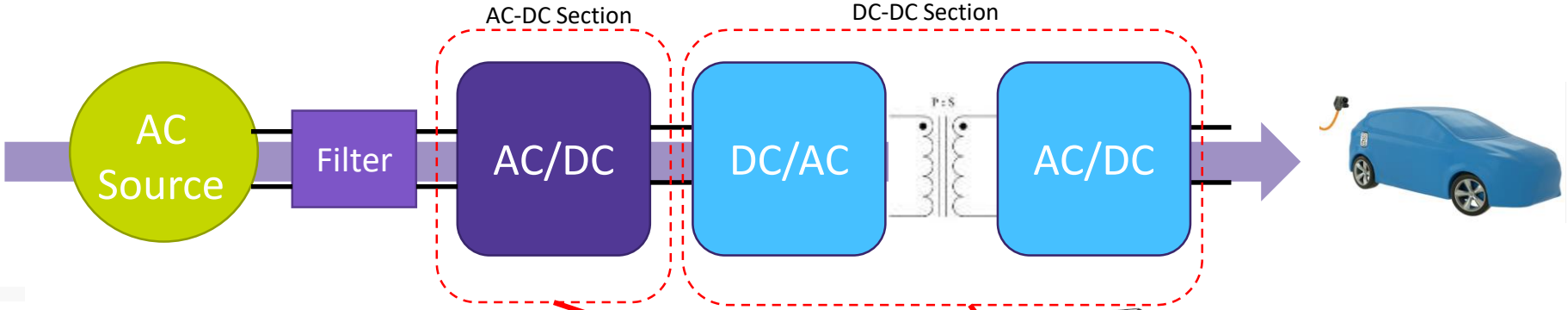

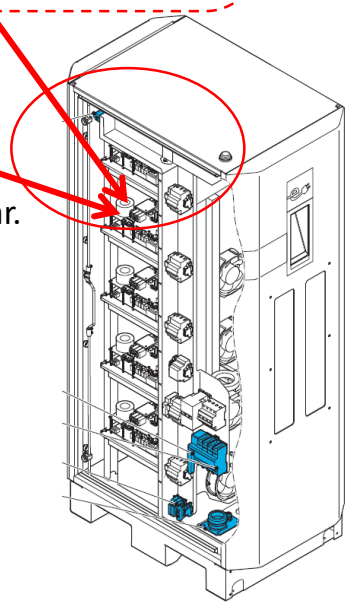

What : Fast charging from charge stations. 30 min charge duration
Bypasses OBC for rapid direct battery charging

Where : PHEV, BEV battery charging 80kW – 150kW. DC charge from station to car.
Typically constructed from multiple 15-20kW blocks

Driving factors : Highest efficiency, Power density (smaller stations).
Future trends bi-directional energy flow

SiC Advantage : >2% higher efficiency, 33% increase in power density
lower system cost

High Power 20kW AC/DC Converter for Off-board Charger

SiC enables high efficiency high power density bi-directional 3 phase AC/DC converter

Si MOSFET

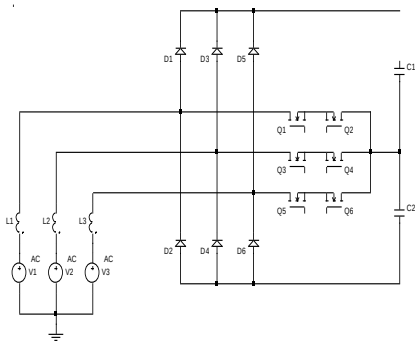

Si IGBT

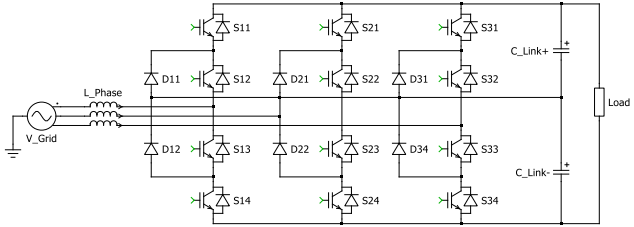

Simplify with SiC

- Less components
- Lower cost
- Higher efficiency
- Smaller size
- Bi-Directional power

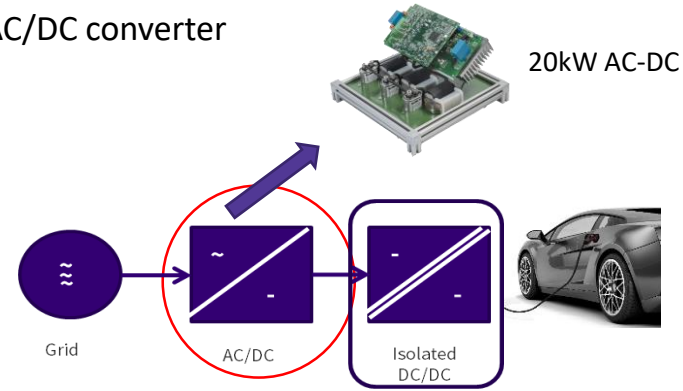

20kW AC-DC power stage

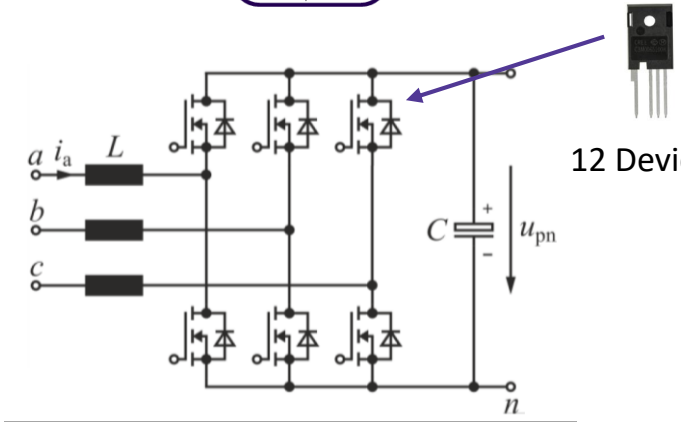

12 Devices

SiC MOSFET
C3M0065100K
TO-247-4 Package

SiC based 2-level high frequency LLC Resonant Converter

Silicon solution

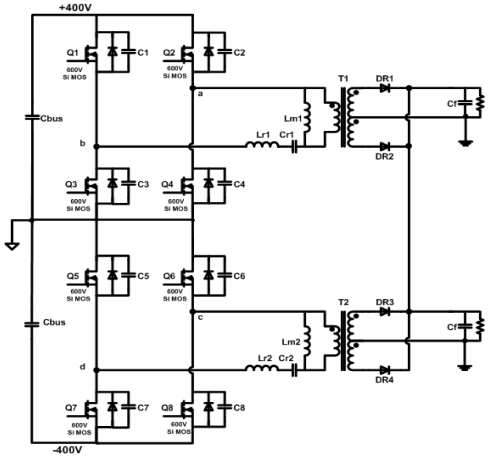

Simplify with SiC

SiC Solution

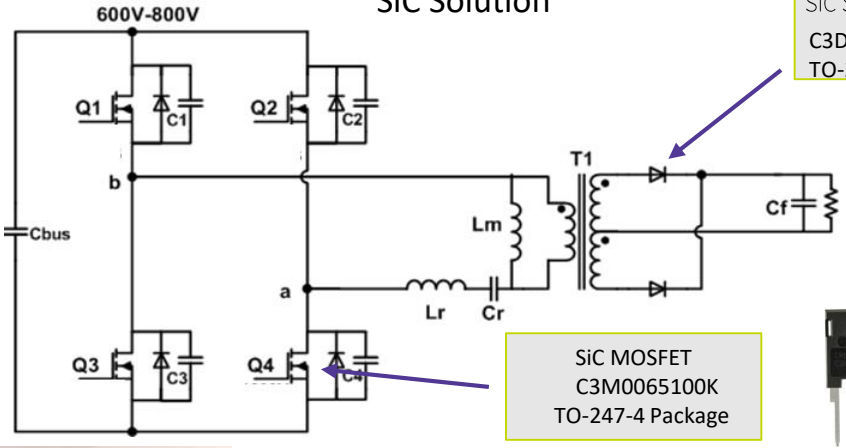

SiC Schottky Diode
C3D20065D
TO-247-3 Package

4 devices

SiC MOSFET
C3M0065100K
TO-247-4 Package

8 devices

15kW Silicon hardware

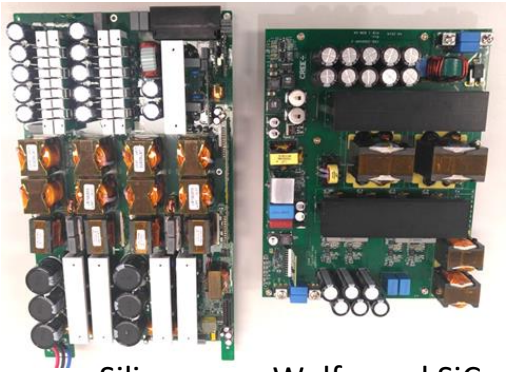

Silicon Wolfspeed SiC

20kW Silicon Carbide hardware

- 33% more power in 33% less space
- Simplify circuit design
- Lower cost
- Increase Efficiency
- Reduce size

Wolfspeed Qual and Reliability Proving SiC Maturity

- SiC power devices have some unique reliability considerations in addition to Si power devices
- Reliability assessments need to be holistic, comprehensive and specific
- The SiC failure mechanisms have been identified and testing methods have been developed
- Successful product qualifications and field reliability show that the reliability science is paying off, and SiC is ready for large volume manufacturing for high reliability applications
- Industry-wide reliability guidelines and standards are being actively developed

Measured distribution V_{BRDSS} over temp

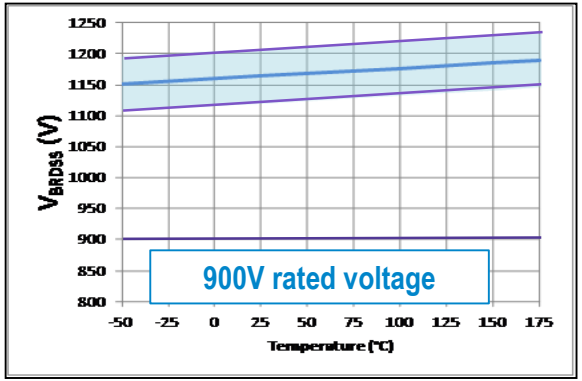

Rugged Voltage Ratings

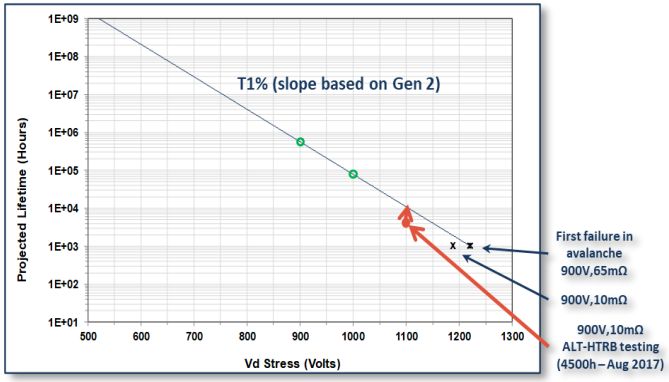

1M hrs Vds Lifetime

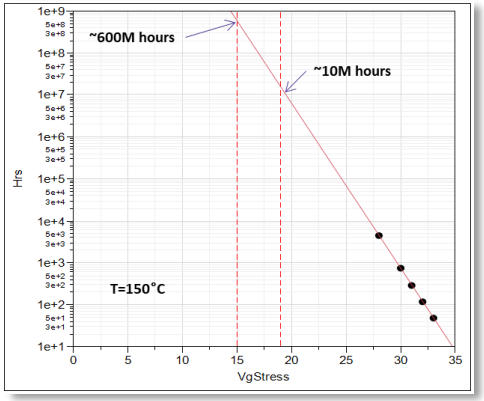

10M hrs Vgs Lifetime

Power Field Failure Rate – 5.4 Trillion hrs - May 2018

Technology	Fielded Device Hours (Billions)*	FIT Rate (valid field failures per billion device hours)**
CSDxxx060 Diode	1202.6	0.11
C2Dxxx120 Diode	510.9	0.64
C3Dxxx060 Diode	2918.7	0.06
C4Dxxx120 Diode	708.2	0.20
C2M MOSFET	63.1	3.7
C3M MOSFET	40.7	4.1

- *Calculated today's date minus confirmed ship date minus 90 days (allowing for time to put into service) * 12 hours per day
- **Calculated as: 2 times the number of valid field failures (excludes engineering evaluations, as-received visual defect escapes or issues, as-received test escapes, packaging and assembly quality issues) divided by fielded device hours; includes an additional factor for statistical confidence margin

Automotive Customers need Automotive Products

E-Series Automotive MOSFET is far more than just a qualification :-

- E-Series products are tested to more rigorous AEC-Q101 Automotive qualification test conditions and are the only products PPAP capable.
- E-Series products have a different production test methodology with tighter production test limits.
- E-Series products are assembled on separate Automotive certified package assembly lines with certified operators.
- E-Series products have stricter production controls such as only one lot is allowed per package date code for better traceability.
- Finally, the products can have thicker passivation and thermal performance to ensure they can pass High Temperature, High Humidity and High Voltage test conditions. (THB-80)

SiC Vehicle Electrification – Drivetrain, On Board and Off Board

The Market Situation
- Monumental 20 year + new open field opportunity for power
- SiC value is very well understood and accepted
- Multiple approaches to system solution – especially drivetrain
- All OEM's seeking differentiation & Differing regional approaches

Driving Factors
- Increased Power density
- Higher system efficiency
- Range extension
- Lower System cost

Supplier Imperatives
- Proven reliability
- Enough capacity
- Product flexibility
- Technology innovation to satisfy future developments
- Component differentiation to allow system differentiation

A Samples and B samples are being developed NOW

The future is electric – and it starts with Wolfspeed