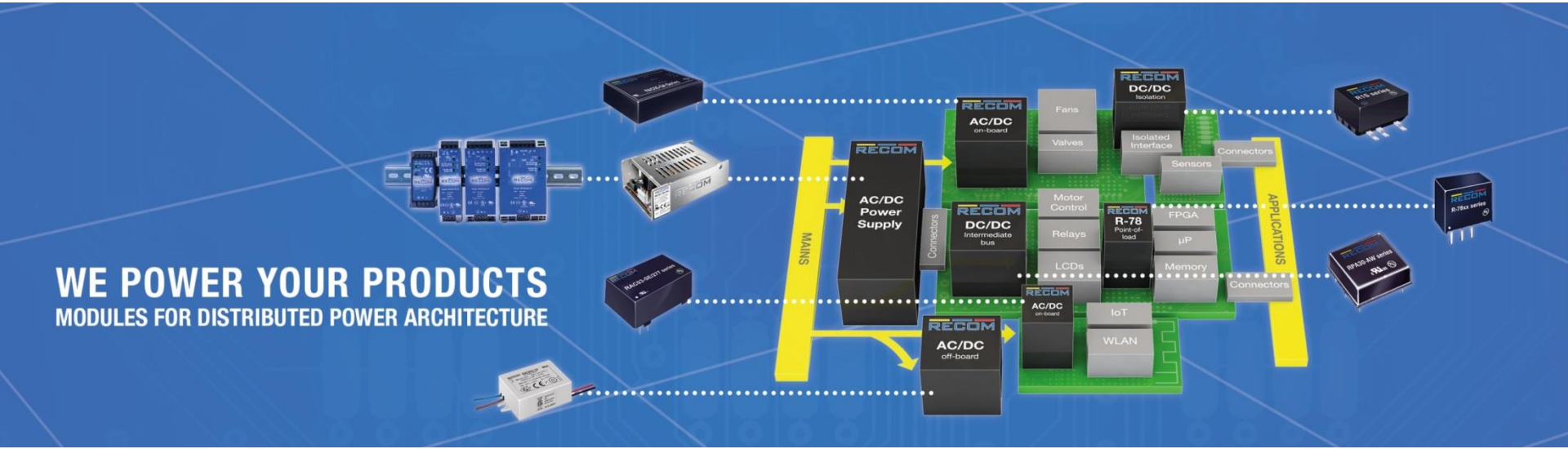

Effects of high switching speed on driving semiconductors and on Insulation Lifetime

Markus Stöger
R&D RECOM

Advantages of fast switching

- Smaller formfactor
- Less ressources
- Higher efficency

2”x 4“
≈1KW/dm^3

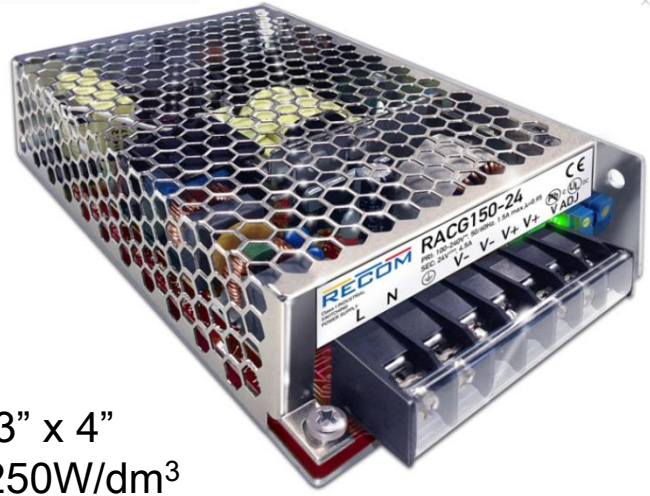

6,3” x 4”
≈250W/dm^3

Actual switching speed (600 V Class)

RECOM

- GaN HEMT > 100Mhz (Datasheet)
- SIC Mosfet several kA/µs
- Superjunction Mosfet >100V/ns
- Trench IGBTs >20V/ns

Transistor basics

With a low Voltage VGS in the range of 5- 20V you switch high Voltage VDS

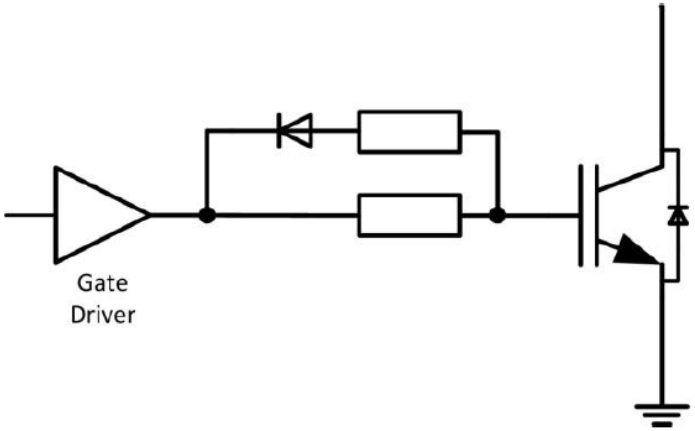

Transistor basics

-V= L*di/dt

10A/ns is possible with GaN (Datasheet)

Lemitter =15 nH (approx. 2.5 cm route on PCB)
-V= 15nH*10A/ns = 150V

Via Inductivity ≈1.2 nH
-V=1,2nH*10A/ns = 12V

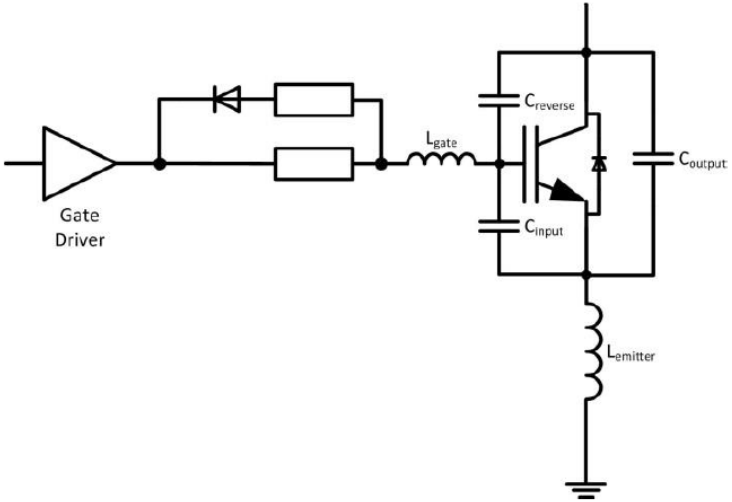

Transistor basics

Additional influences of other bridge legs

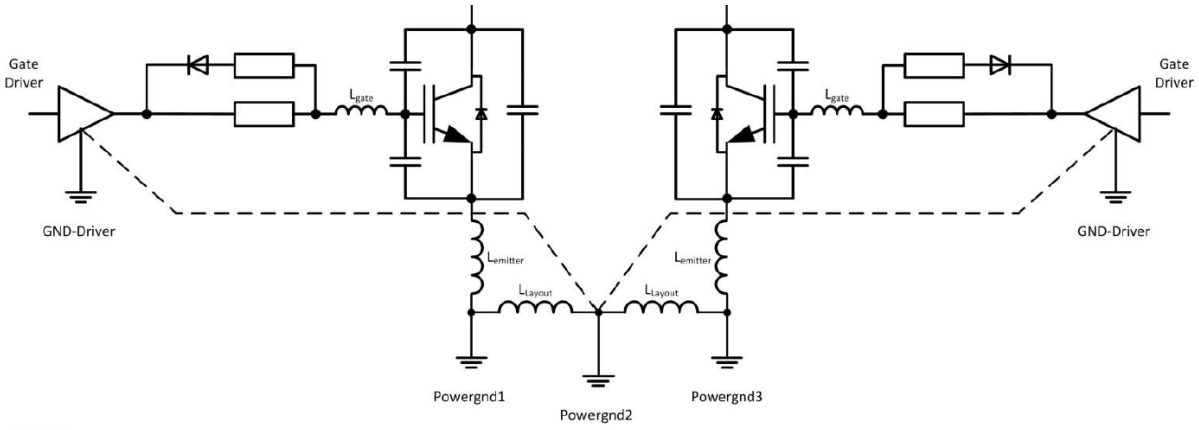

Transistor basics

Eliminating the influence of layout inductivity with isolated gate drivers and isolated power supplies.

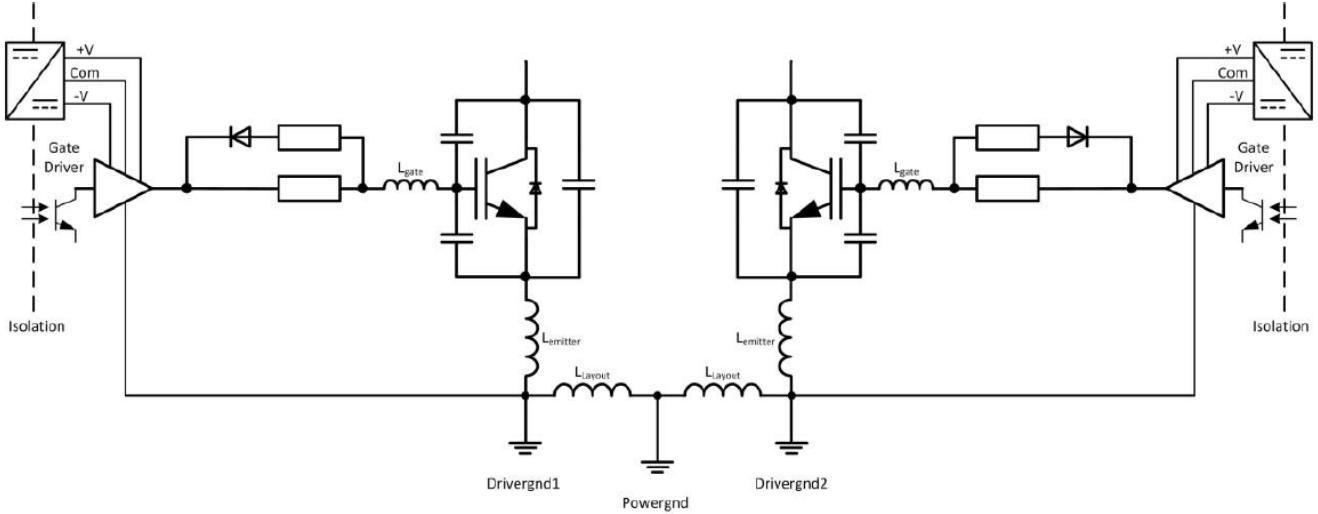

Transistor basics

Eliminating the influence of layout inductivity with isolated gate drivers and isolated power supplies and Kelvin contacts

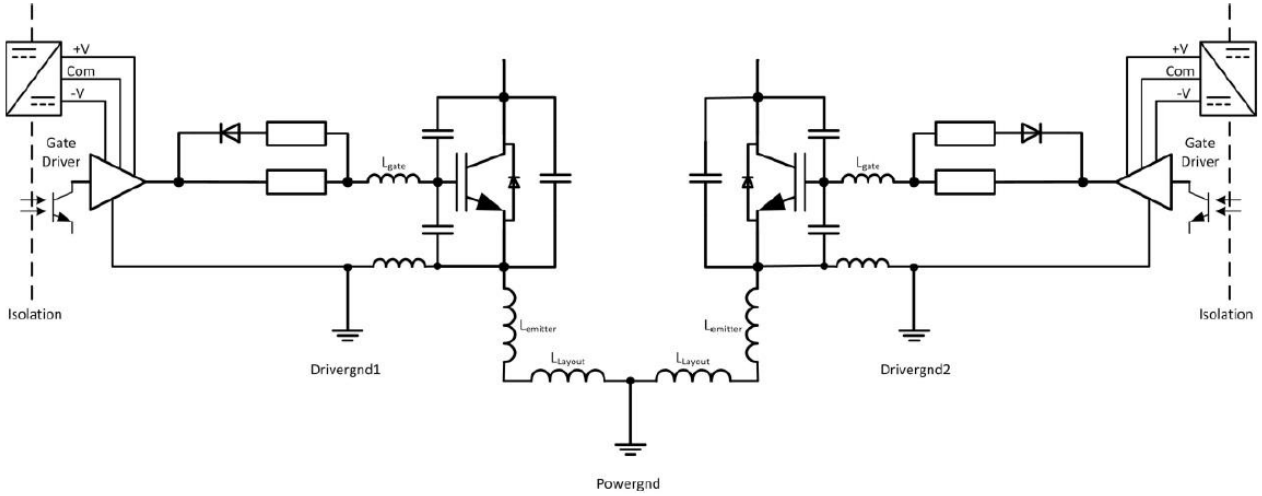

Transistor basics

Negative gate source voltage helps to avoid unwanted turn on due to Miller capacitance. Further benefits only possible with driver integration.

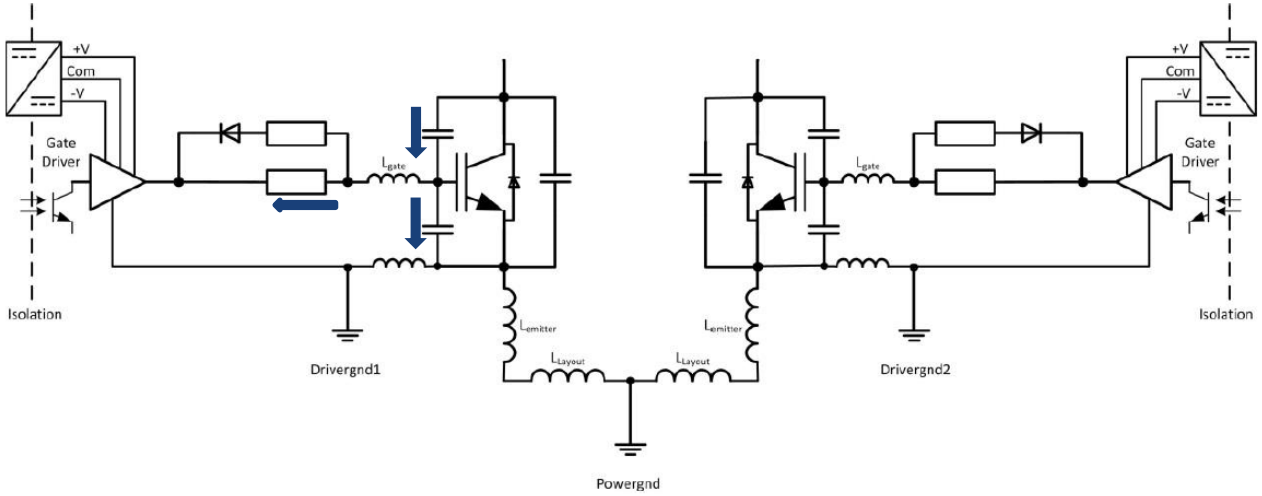

GaN on CMOS

Horizon 2020
European Union Funding
for Research & Innovation

RECOM

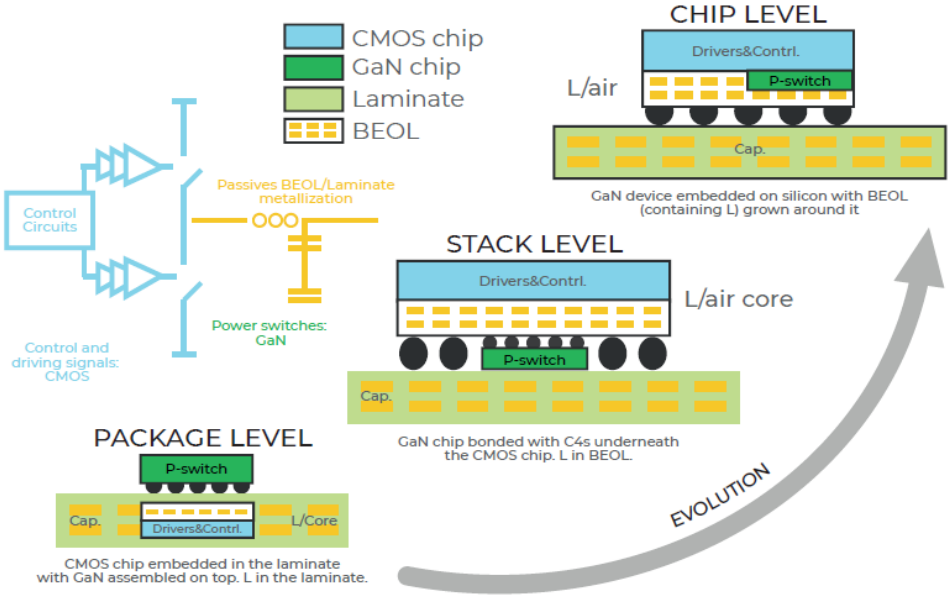

IBM Research

EpiGaN
AHEAD IN GaN SOLUTIONS

KU LEUVEN

AT&S

X-FAB

Fraunhofer
IAF

Tyndall
National Institute

PNO

ihp

NXP

www.ganoncmos.eu

Isolated Gate Driver

RECOM

Abbreviation	Meaning	Typical values
DTI	Distance through Isolation	sometimes < 10µm
Cr	Creepage	several mm
Cl	Clearance	several mm
VIORM	Maximum working insulation Voltage	600-2500 Vpeak
VPR	Production Test Voltage (1 sec)	VIORM x 1,875
VIOTM	Sinusoidal overvoltage for 60 seconds	several kV
VSurge	1,2µs/50µs Surge Voltage	several kV
CMTI	Common Mode Transient Immunity	Up to 400kV/µs

Isolated Gate Driver

Common mode transient immunity describes the maximum dv/dt between isolated circuits, where no bit failure occurs.

Mostly only single pulse measurement.

This has nothing to do with reliability!

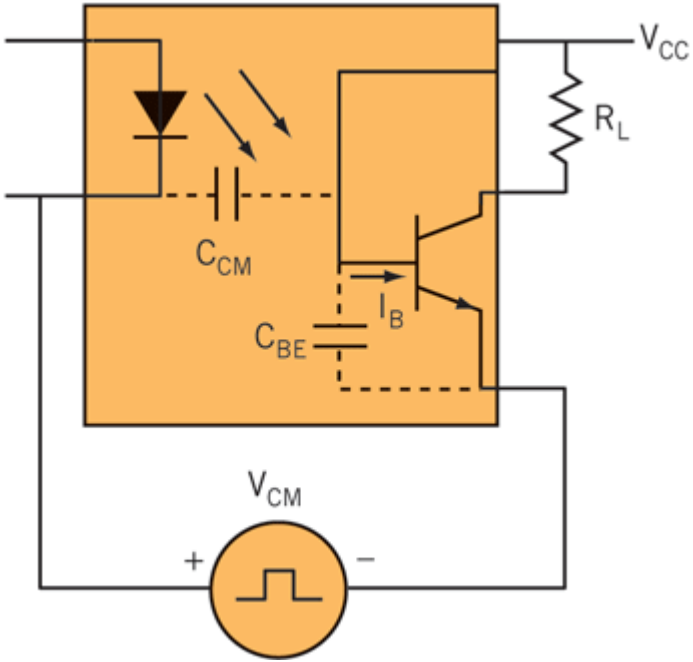

Isolated Gate Driver

VIORM/VIOWM/VIOTM/VPR

Test methods are defined in

IEC60747-5-5

VDE 0884-10

UL1755

All test methods refer to 50/60 Hz ,DC or peak values

Gate transformer

Not well defined maximum allowed voltage

Not standardized

Example:

Isolation Voltage :1000VRMS

The isolation test voltage represents a measure of immunity to transient voltages and the part should never be used as an element of a safety isolation system. The part could be expected to function correctly with several hundred volts offset applied continuously across the isolation barrier

Gate Transformer

construction

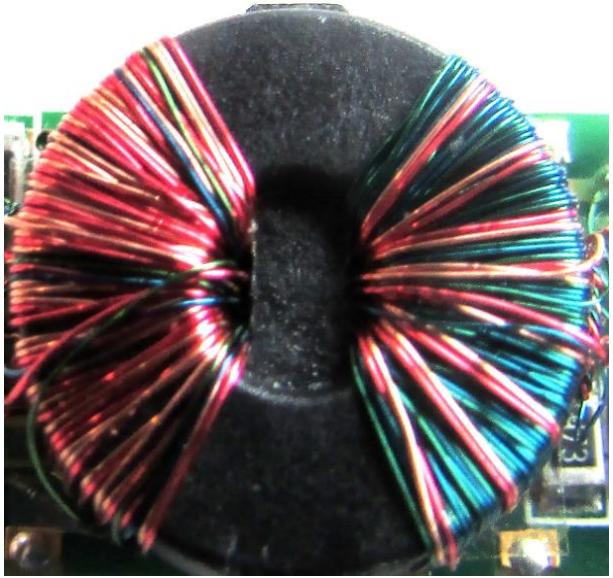

Gate Drive Power supplies

Similar situation as with gate transformers

Not standardized

CMTI mostly missing

Continuous working voltage value is missing

Aging due to partial discharge

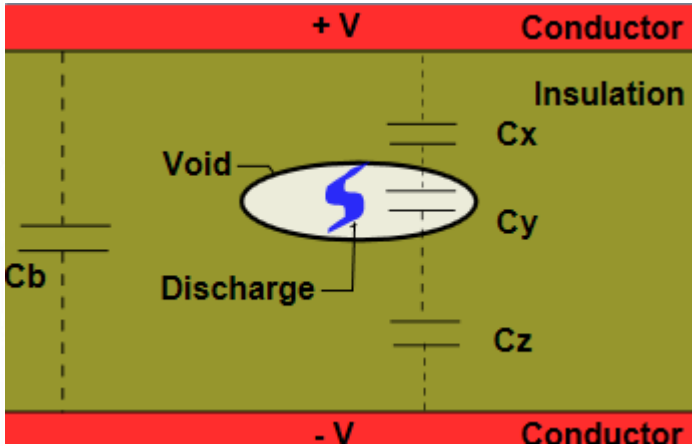

Partial Discharge is a formation of plasma within a void

Partial discharge occurs on organic and inorganic insulation materials

With organic material, partial discharge leads to a carbonizing of the surface within the void

Aging due to partial discharge

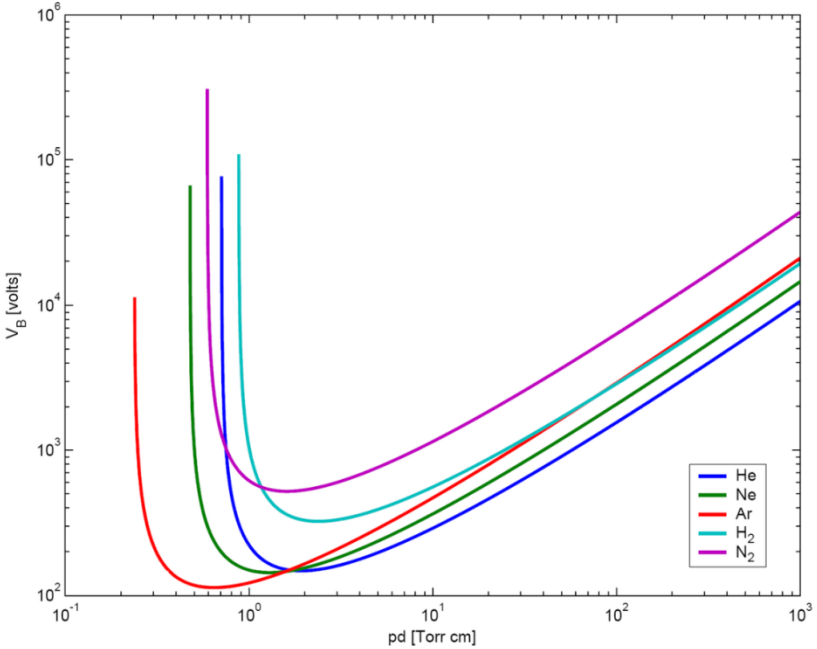

Paschen curve

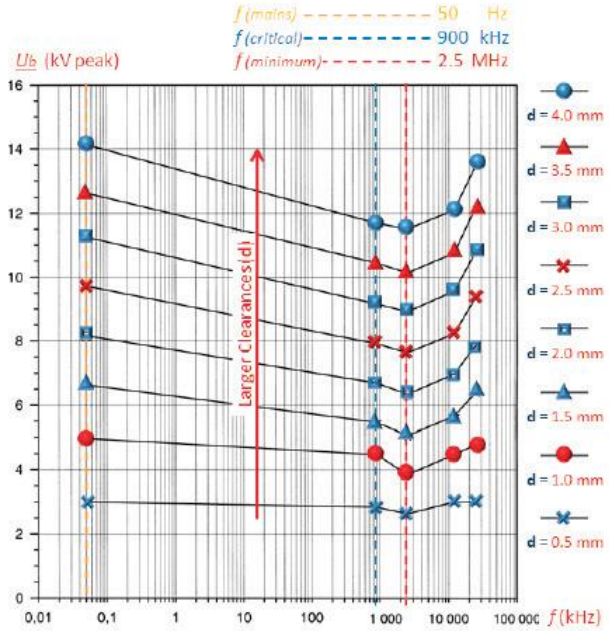

Breakdown Voltage vs frequency in air at atmospheric pressure IEC 60664-4

Additional effects

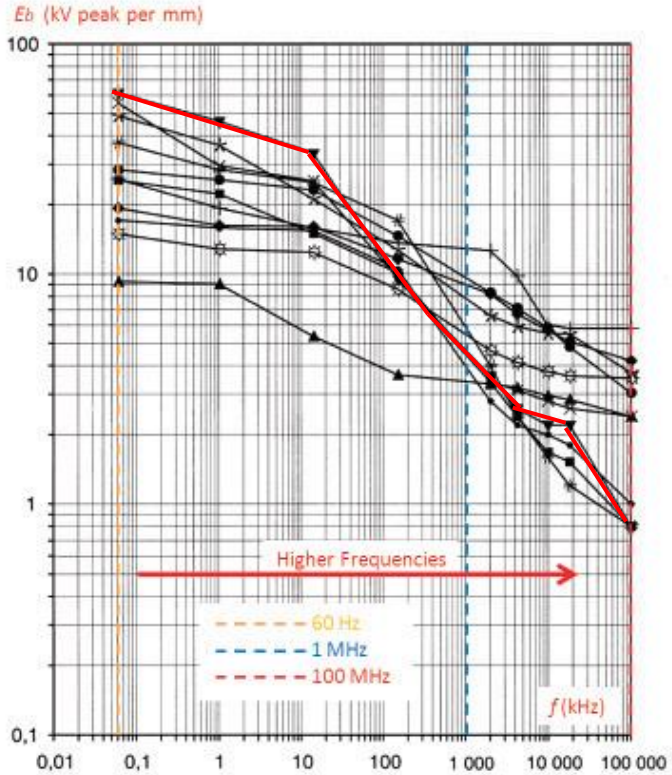

Breakdown voltage of solid isolation IEC 60664-4

Some ICs have a DTI < 10µm!!!

PHENOLIC TEFLON POLYETHYLENE POLYSTYRENE CERAMIC PORCELAIN
MICA GLASS SILICONE-GLASS MELAMINE-GLASS PAPER-PHENOLIC

Other effects

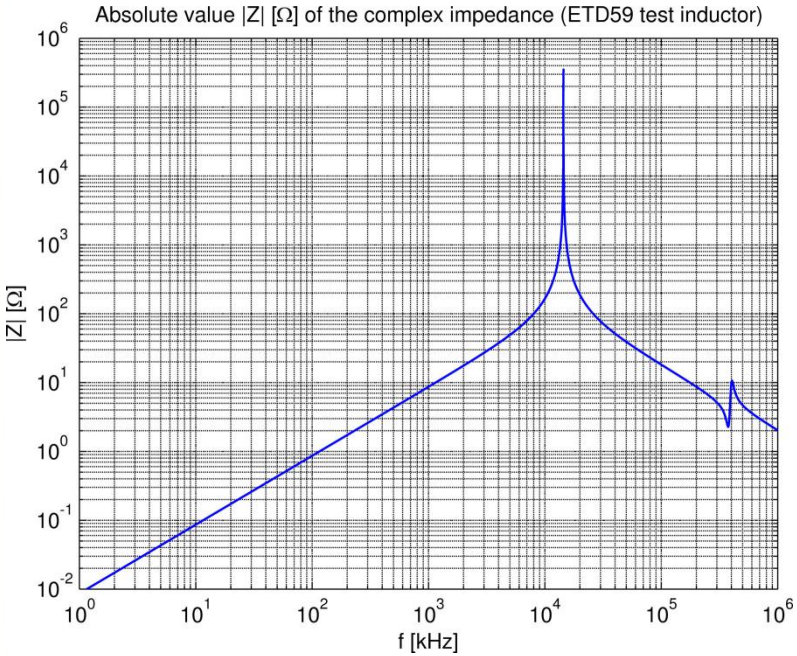

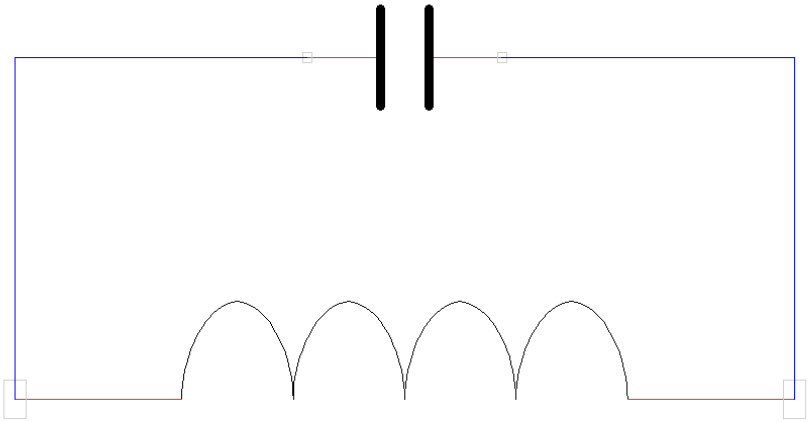

Influence of higher resonance frequencies
von Prof. Dr. –Ing. Alexander Stadler
ECPE Tutorial: Wide Bandgap User Training

Other effects

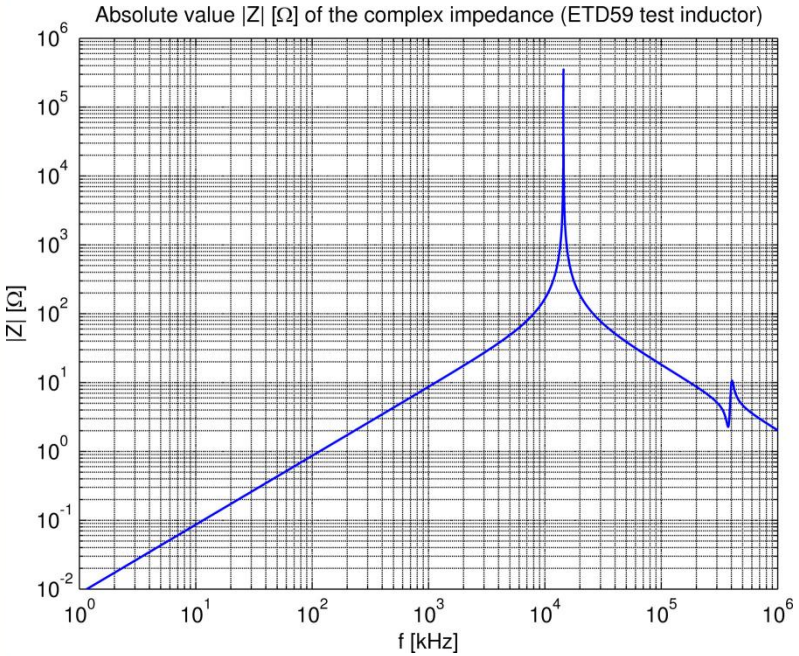

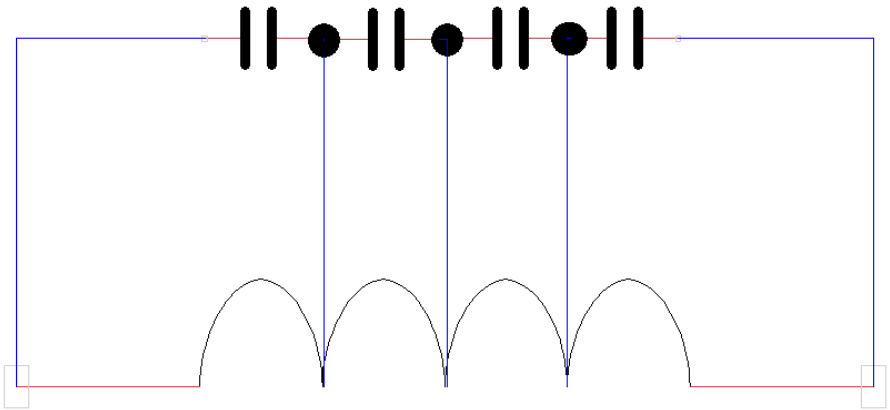

Influence of higher resonance frequencies
von Prof. Dr. –Ing. Alexander Stadler
ECPE Tutorial: Wide Bandgap User Training

Other effects

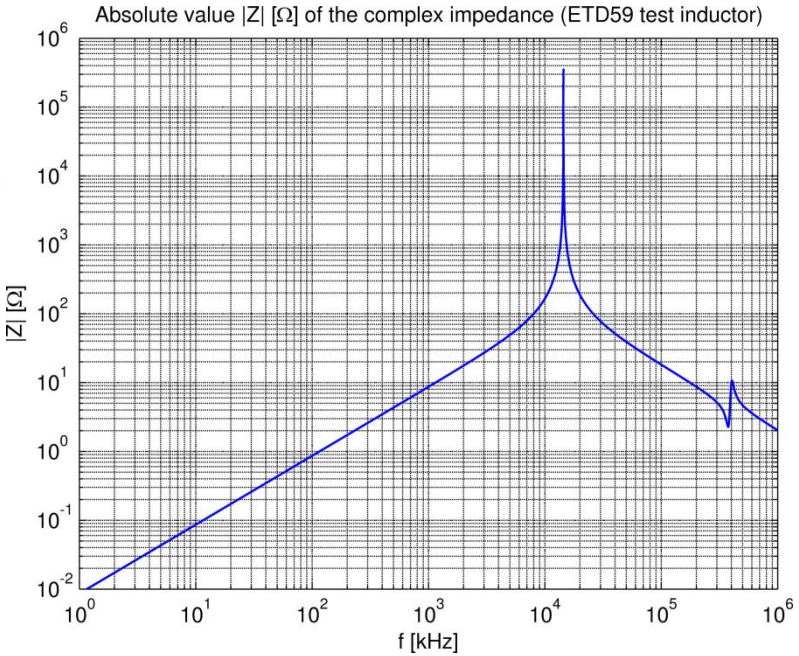

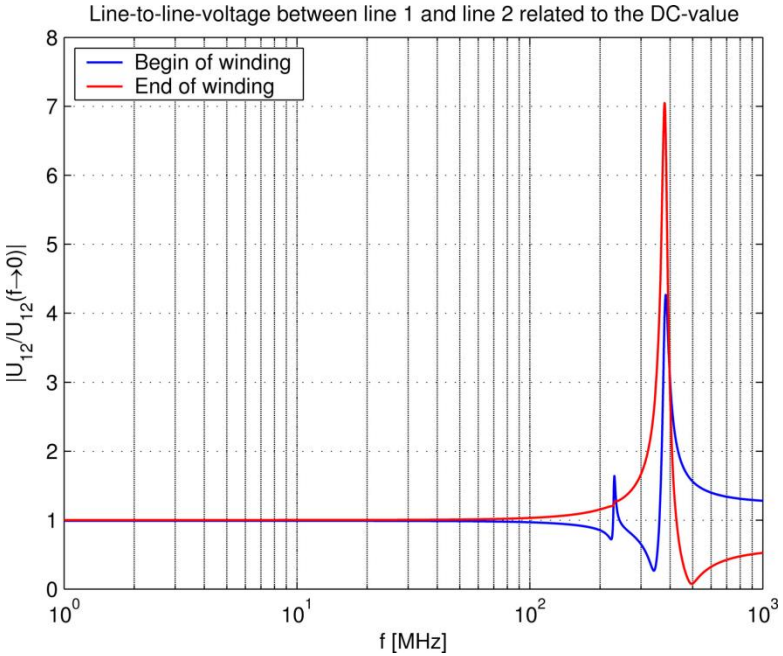

Influence of higher resonance frequencies
von Prof. Dr. –Ing. Alexander Stadler
ECPE Tutorial: Wide Bandgap User Training

Insulation equivalent circuit

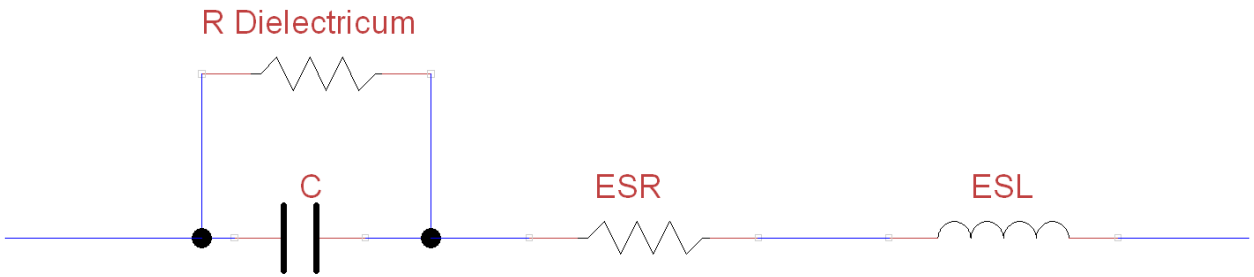

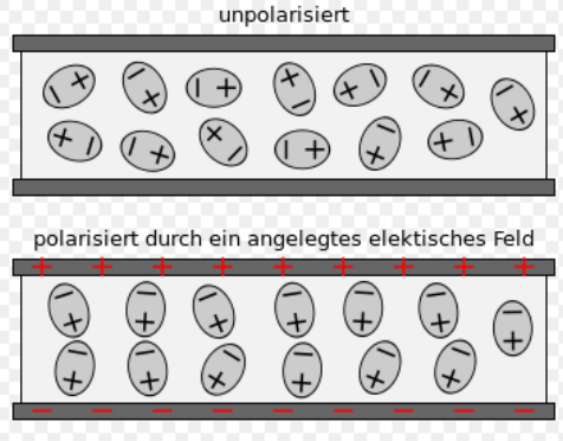

Losses increase with frequency

R-Ref01-HB

Half bridge reference design for fast switching

Suitable for different Gate Source Voltages
+6V, +15V/-3V, +15V/-9V,
+20V/-5V …..

Suitable for TO-247 3 and 4 Pin

Available through distribution

As a member of the Austrian Association of Consulting Engineers represented by

SCIENCE
PASSION
TECHNOLOGY

Barrier Insulation Evaluation Research

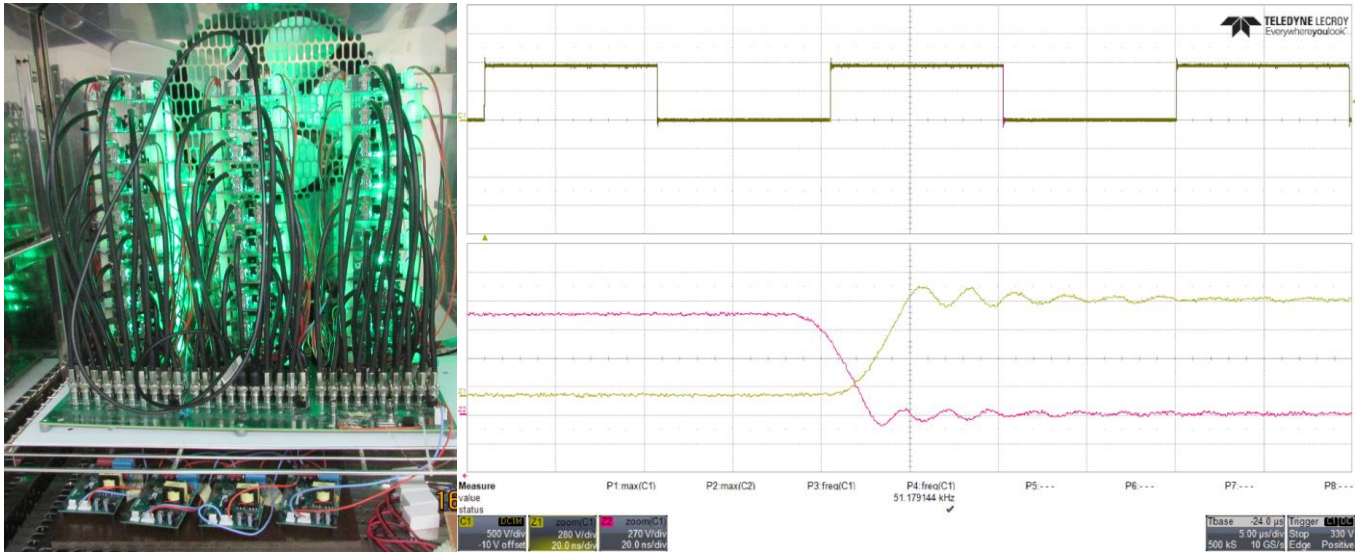

Priv.-Doz. Dipl.-Ing. Dr.techn. Christof Sumereder/TU Graz, FH Johanneum
Recom Team

BIER

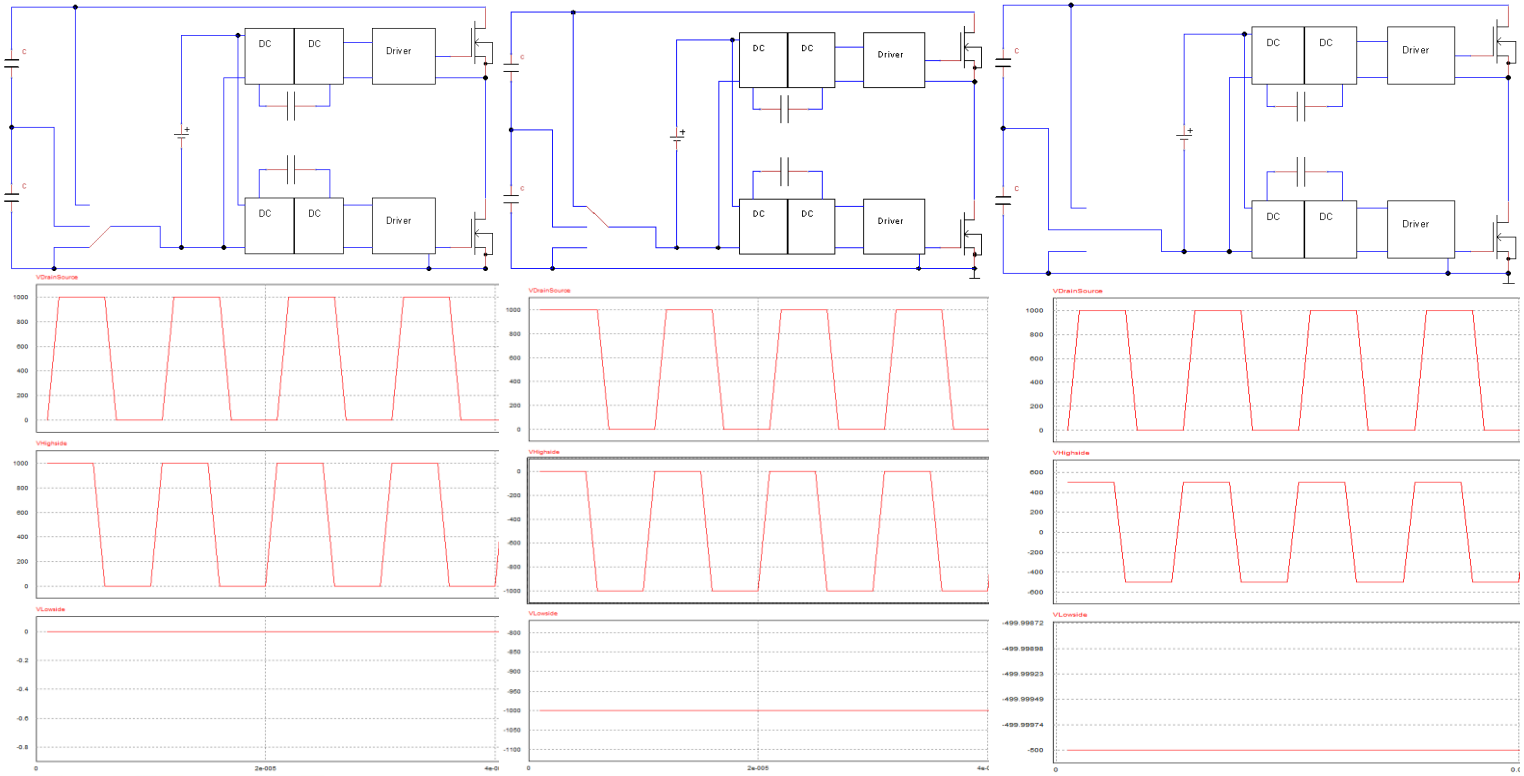

BIER

Test Parameter

Test duration:	1464h
Test voltage:	1000V
Ambient temperature:	70°C
R12P22005D	93°C
C2M1000170D-NC	116°C
Switching frequency	50kHz
dv/dt	65kV/µs

BIER
Partial discharge measurements

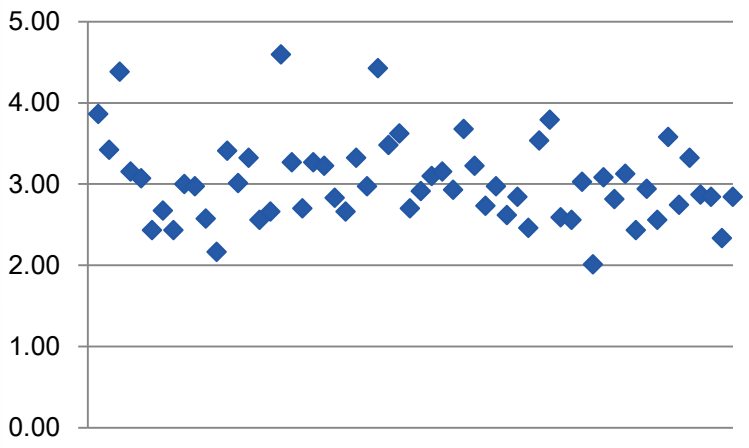

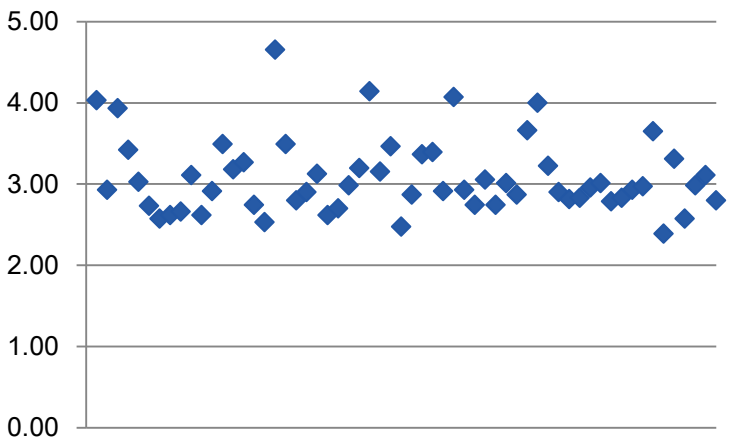

R-REF01-HB

Whitepaper

DC/DC Converters for GaN Gate Drivers

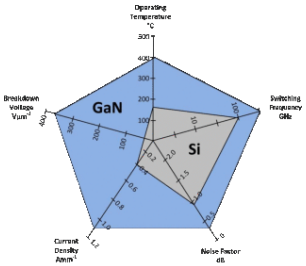

January 2017

Whitepaper

Designing Robust Transistor Circuits with IGBTs and SIC MOSFETs

August 2016

summary

- Isolated gate drives have advantages at high switching speed
- High switching speed has an influence on insulation characteristics
- Isolation voltages are often based on low frequencies .
- Partial discharge measurement gives more information about the insulation than high pot testing
- The voltage on the insulation can be higher than the bus voltage
- Dielectric losses have a bigger impact at higher frequencies
- BIER Test proves : RECOM DC-DC power supplies are suitable for high switching speed

RECOM

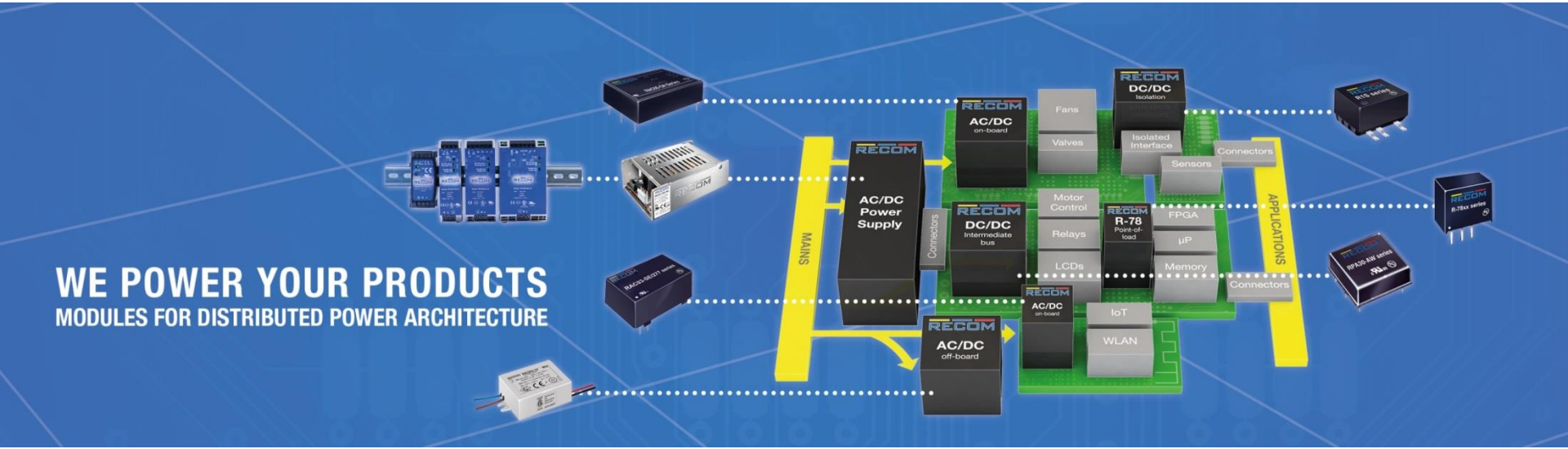

www.recom-power.com