boards & solutions + ECE

Combined Print Magazine for the European Embedded Market

October 04/17

Cover Story:

Computer-on-Modules for Robotics & Industry 4.0 Automation

SPECIAL FEATURES:

- Chips & Components
- Embedded Computing
- Tools & Software

Dear Readers,

The parliamentary elections in Germany are just finished with a result which weakens the up to date ruling parties of the grand coalition and strengthens the so called smaller parties. Especially the success of the Alternative für Deutschland will change the political climate to more nationalism. I believe this is the first step into a Germany-first mentality which follows the America-first strategy of US-president Donald Trump. This comes amiss in a situation in which the European Community has a lot of problems already with separatist objectives. But at the moment it is too early to assess the far-reaching political impacts of this election. I hope the democratic parties in Germany will find the right way to work together to solve the problems in Germany and in Europe nowadays and in the future.

What does the result of the German election mean for the Embedded Industry? I do not hope that there will be a similar protectionism like in the USA but fences exist in Europe already and the My-country first mentality is very popular. But the market for embedded products is international and fences have no significance at all. A good example is our cover story which promotes the Computer-on-Modules products of a Taiwanese company which are especially intended to solve potential problems like scalability in applications for Industry 4.0 and collaborative robotics let´s say finally in the Industrial Internet of Things. Interaction between the machine and robot controls, the intelligence of each device needs to be ramped up to enable real collaborative devices. Artificial Intelligence (AI) technology is one of the drivers of the Industry 4.0 trend that is expected to grow at the highest rates. AI means dealing with simulation and implementation of human intelligence on a computer. For this intelligence, self-learning algorithms need to be implemented alongside all the supporting sensor technologies that deliver the relevant situational information that needs to be analyzed for making decisions. The critical challenge is turning legacy machines and robotic arms that are traditionally programmed to execute 100% predefined movements into such intelligent machines and robots. Drastically increased computing performance is required to support all the computing, measurement, motion control and machine vision capabilities that will ultimately enable customization of products and flexible mass production on the factory floor through collaborative intelligence. And looking ahead, this computing performance needs to be highly scalable to be able to fulfill future demands.

Even though AI has nothing to do with politics I do hope that human intelligence will similarly dominate the political and economic decisions of the politicians to collaborate solving the even more complex general problems of our world and lead us all into a peaceful and prospering future.

With this in mind I hope you´ll enjoy reading this issue

Yours Sincerely

Wolfgang Patelay
Editor

Cover Photo: *ADLINK*

Computer-on-Modules for Robotics & Industry 4.0 Automation 6

Industry 4.0 and the availability of technologies for collaborative robotics continuously increase the intelligence requirements in automation and robotics. Computer-on-Modules enable system engineers to adapt the computing cores to these evergrowing needs most efficiently by offering flexible scalability off-the-shelf.

Wireless charging: advanced technology delivers real benefits 9

Power needs to catch up with data and become wireless to truly empower the latest generation of mobile devices. In this technical article, Infineon reviews the design challenges and standards that drive this new sector before looking at technologies that make this vital step possible.

Selecting sense resistors for motor control with reinforced isolation 12

This article summarizes the differences in standards between traditional optocoupler-based technologies and inductive and capacitive technologies for reinforced isolation. It describes a system using digital control of a motor drive that incorporates current sense resistors for sensing winding current, and recommends how to select the best resistor for this application.

The successful form factor SMARC 2.0: where does it stand today? 15

The new SMARC standard 2.0 was introduced in June 2016. Besides important improvements and technical updates, it also threw open the door to the Internet of Things (IoT). One year later it is now time to assess the acceptance of the Smart Mobility Architecture Standard 2.0.

Hardware for Industrial IoT fog and mist computing 24

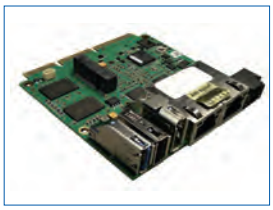

The latest industrial Intel Atom processors are empowering new, small form factor systems for industrial applications. IIoT hardware optimization using a bottom-up approach gathers momentum and the ecosystem of providers of fog and mist-computing solutions gets new hardware.

Basics and tools for multi-core debugging 28

In the past, debugging meant seeking for variables written with wrong values. These days, it's completely different: for the multi-core systems used nowadays in automotive control units, debugging means managing deadlocks, resource conflicts or timing issues of real-time applications.

Computer-on-Modules for Robotics & Industry 4.0 Automation

By Knud Hartung, ADLINK

Industry 4.0 and the availability of technologies for collaborative robotics continuously increase the intelligence requirements in automation and robotics. Computer-on-Modules enable system engineers to adapt the computing cores to these evergrowing needs most efficiently by offering flexible scalability off-the-shelf.

Collaboration is a major trend in automation today: Industry 4.0 systems require the controls of all the various machines and robots to collaborate with each other. On top of this demand for fully meshed control logic there is also a transition happening where collaboration is not only based on the exchange of digital information in real-time, but also on artificial intelligence and situational awareness empowered by deep learning technologies and powerful smart environmental sensors such as intelligent cameras.

With all these new elements of collaboration, vendors of traditional robotics and machine controls are facing significant changes; and those changes are happening fast. The collaborative robots market is forecast to grow at a high CAGR of 56.94% between 2017 and 2023 and is expected to be worth USD 4.28 Billion by 2023. This steep growth is attributed to high ROI rates and low prices, making collaborative robots more attractive for SMEs, as well as increasing industry investment in automation to support the Industry 4.0 evolution.

Engineers who want to be part of this innovation wave are facing manifold challenges. One major engineering task is the adoption of Industrial Internet technologies to enable the collaboration between the different systems. Here, the engineer task is to enable their systems to communicate in real-time with other systems; and with communication demands increasing as more and more controls need to coordinate with each other, bandwidth demands are now rising from traditional 100 Mbit or 1 Gbit Ethernet performance to 10 GbE offered by new fog servers. Those servers fulfill major higher-level analytics, decision, communication, and control tasks in Industry 4.0 environments. Protocol implementations for real-time communication such as a decentralized data distribution service (DDS) need to be managed here as well.

On top of this Industry 4.0 interaction between the machine and robot controls, the intelligence of each device needs to be ramped up to enable real collaborative devices. Artificial Intelligence (AI) technology is one of the drivers of the Industry 4.0 trend that is expected to grow at the highest rates. AI means dealing with simulation and implementation of human intelligence on a computer. For this intelligence, self-learning algorithms need to be implemented alongside all the supporting sensor technologies that deliver the relevant situational information that needs to be analyzed for making decisions. The critical challenge for manufacturers is turning legacy machines and robotic arms that are traditionally programmed to execute 100% predefined movements into such intelligent machines and robots. Drastically increased computing performance is required to support all the computing, measurement, motion control and machine vision capabilities that will ultimately enable customization of products and flexible mass production on the factory floor through collaborative intelligence. And looking ahead, this computing performance needs to be highly scalable to be able to fulfill future demands.

There is clearly a massive amount of work involved in implementing all these functionalities – not to speak of the additional IoT gateway requirements for OEMs to improve field deployment, maintenance services and on the fly deployment of new machine and robotic functionalities. So how can engineers fulfill all these new tasks under the high pressures from market dynamics where first to market is a major determining factor for gaining market share?

One lever is to utilize existing ecosystems and standards to streamline the engineering process by using off-the-shelf available frameworks and open source software such as real-time Linux or hypervisor technologies so that engineers can concentrate on the application development. Another lever lies in changing the way of designing the dedicated

SUPERMICRO®

EMBEDDED SOLUTIONS

SMART FACTORY

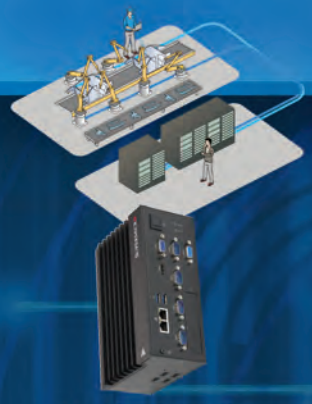

Machine Controller
SYS-E100-9AP-1A

NAS Storage
SYS-5029A-2TN4

Edge Gateway
SYS-E100-9AP

INTELLIGENT VIDEO/TRANSCODING & STREAMING

Video Transcoding
SYS-5019S-TN4

DVR to Restore
SYS-5028D-TN4T

Media Server
SYS-1019S-MP

Edge Gateway
SYS-E300-8D

RETAIL, POS, KIOSK, DIGITAL SIGNAGE

Digital Signage
SYS-5018D-FN8T

Retail Sales
SYS-E300-8D

Kiosk & ATMs
SYS-E200-9B

High Performance Intel® Xeon® ***processor*** *and*
Low Power Intel Atom® processor family

intel XEON PLATINUM inside™

Intel Inside®.
Powerful Productivity
Outside.

SUPERMICRO®

Learn more at www.supermicro.com/embedded

Figure 1. The rugged starter kits are tailored for Industry 4.0 and collaborative robotic applications and come complete with reference designs for various purposes

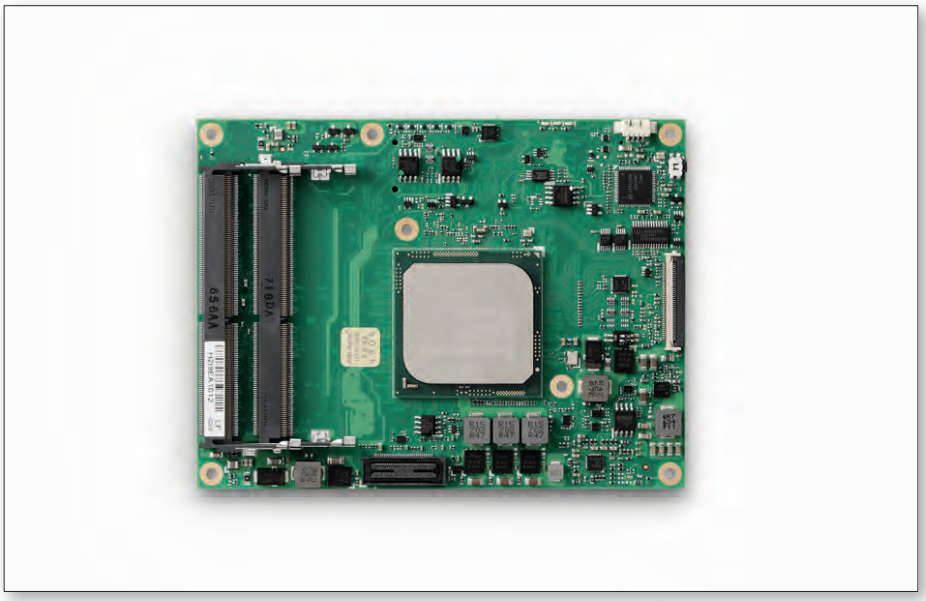

Figure 2. Thanks to their 10 GbE interfaces and massive PCIe support, the brand-new COM Express Type 7 Computer-on-Modules from ADLINK Technology are tailored for Industry 4.0 server and collaborative robotic applications

hardware. Traditionally, leading machine and robot manufacturers used to develop their own controller boards. However, with new generations of CPUs being launched at accelerated speeds and machine equipment needing to incorporate the latest functions to meet Industry 4.0 demands, manufacturers are forced to change their controller board designs more frequently. This requires time and leads to delays in passing certifications so ultimately results in increased time-to-market. To circumvent these problems, manufacturers need to start to evaluate the use of embedded Computer-on-Modules (COMs) for customizing their control boards. With these off-the-shelf available COMs, machine performance can be upgraded to the latest CPU with a simple module replacement. There is no need to redesign the entire control board, which helps to significantly accelerate the product development cycle.

The COM design model, which combines the core module and a customized carrier board, has the advantage of boosting flexibility. Yet there are further challenges to overcome. First of all, a COM is not a complete single board computer; it is the system core and controls peripheral applications via interfaces and specialized functionality on the carrier board. In the case of equipment malfunction, the added complexity may make it more difficult to identify whether the source of the problem lies in the carrier board, COM or peripheral cards. Therefore, without help from a team of experts, locating the root cause can be time consuming. In addition, manufacturers with ambitions to develop intelligent machine or robotics solutions tend to engage in projects that are diverse and often involve complex requirements such as firmware changes and BIOS customizations. Support for multiple operating systems including Windows, Linux, RTOS and virtualization is also required so specific development kits are needed to ensure smooth development of both the carrier board and software. However, as many suppliers are outsourcing a large part of their development work to third-party vendors and have no plan to train their own software engineers, they lack the ability to solve problems independently and to promptly provide the necessary technical support.

A leading international robotic arm manufacturer faced the challenges described during its transition from internally designed controller boards to the adoption of the COM concept. ADLINK Technology comprehensive COM starter kits – specifically tailored to fulfill not only individual but all requirements for industrial automation and robotic applications, complete with reference designs – were able to eliminate most of the challenges of the customer. When the customer encountered difficulties during development, the technical team responded quickly and effectively to assist in addressing system integration issues, whether or not they were directly related to the COM. When necessary, highly trained ADLINK staff visited the customer location to find the root cause of the problem as it is the company goal always to provide professional support to customers during the entire development process. If module vendors have their own signal measurement laboratories, they can help customers also in measuring all computer input and output signal waveforms to ensure that COM design and manufacturing comply with all the required standards. Yet helping customers during the design-in process of a module is not the only service COM vendors can offer. They can support them even more comprehensively by publishing complete design for manufacturing (DFM) verification principles for the product design-in stage. All those efforts aim to guarantee highest product compatibility and reliability as well as fastest time-to-market. Close collaboration with Intel is helping firms such as ADLINK to launch new COM products the day new processors for the embedded markets become available, so that OEM engineers can instantly upgrade their control systems with the very latest Intel processor technology, allowing really fast and also highly reliable time-to-market strategies. ■

Wireless charging: advanced technology delivers real benefits

By Stephan Schächer and Milko Paolucci, Infineon

Power needs to catch up with data and become wireless to truly empower the latest generation of mobile devices. In this technical article, Infineon reviews the design challenges and standards that drive this new sector before looking at technologies that make this vital step possible.

Power is essential to every electronic device - that will never change. However the current approach of charging from a wall outlet is becoming obsolete. Charging needs to become more convenient for the user, they do not want to plug in the device but simply place it on a surface to charge. More than this, consumers want to be able to do this in public places such as airports, hotels, event venues, fast food chains and coffee shops, meaning that standardization needs to mature to drive universal compatibility. Somehow, designers have to find a way to re-invent current chargers to be able to deliver power through 'thin air'. The current switch mode power supply (SMPS) approach relies on a magnetically coupled transformer to change the voltage level and transfer power from the primary side to the secondary. In wireless, this transformer is split between the charger and the device. As the windings are separated (by the case thickness and air), the coupling is looser than with a normal SMPS. However, power can be transferred with unexpected efficiency with the correct magnetic design as the coils and coupling have a far greater impact on the overall performance than with an SMPS. Other than the magnetics, issues including efficiency, mechanical packaging, electromagnetic interference (EMI), thermal management and metallic foreign objects (such as coins and keys) create further challenges for designers.

As with many emerging technologies, multiple incompatible standards develop which stifle progress until a universal solution emerges. Wireless charging has two industry alliances and two standards. The Wireless Power Consortium (WPC) supports the Qi inductive standard that supports tightly coupled charging. Qi has become the mainstream standard, covering over 80% of all wireless charging receivers. The Power Matters Alliance (PMA) and the Alliance for Wireless Power (A4WP) were formed as separate organizations. PMA focused on tightly coupled inductive solutions whereas A4WP worked on loosely coupled resonant technology. PMA and A4WP merged and rebranded as the AirFuel Alliance (AFA).

Currently, there are three topologies for wireless charging, offering different advantages. Single-coil inductive is the simplest and most prevalent solution. Supported by Qi and AirFuel, this employs a single transmitter coil and requires exact and close positioning of the device and the transmitter, which precludes charging through surfaces. This approach can only charge a single device. Multi-coil enables intelligent systems that detect the coil closest to the device and direct the power accordingly. The broader charging field allows you more freedom in placing the device to be charged. AFA supports a resonant approach that relies on resonance between the transmitter and receiver to transfer energy far more efficiently. This approach charges multiple devices from a single coil and allows for a greater distance (up to 50mm) between the transmitter and receiver. This flexibility in positioning of the device gives a 'drop and go' experience with efficiencies up to 80%. Although an inductive solution can deliver more power in a precisely defined and controlled scenario, the resonant approach delivers an efficient energy transfer with higher placement freedom.

The resonant approach permits higher power ratings, allowing laptops or power tools to be charged wirelessly. The three key elements of a wireless charging solution are the adapter/charger, the transmitter and the receiver. The adapter is often separate and connected via a cable to the transmitter, although they could equally be combined. It powers the transmitter from the mains, usually with a regulated 5-20V DC. The transmitter contains a MOSFET-based bridge topology inverter to convert the DC power into an alternating magnetic field. A microcontroller and driver components provide flexibility and functionality.

There are two primary topologies used for resonant (AirFuel) applications, Class D and Class E. Class D offers an almost flat efficiency curve over a wide load range and is therefore

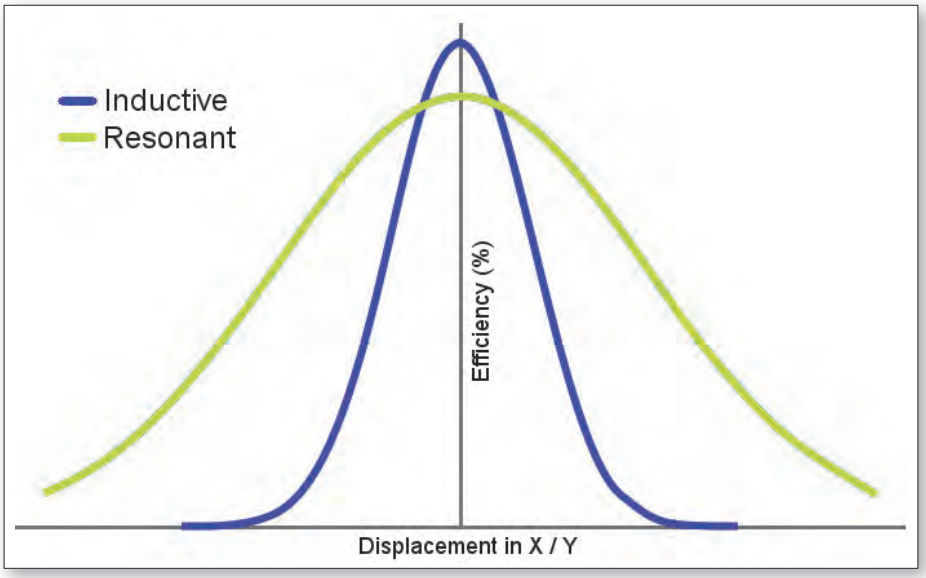

Figure 1. Comparison of efficiency vs displacement for inductive and resonant approaches

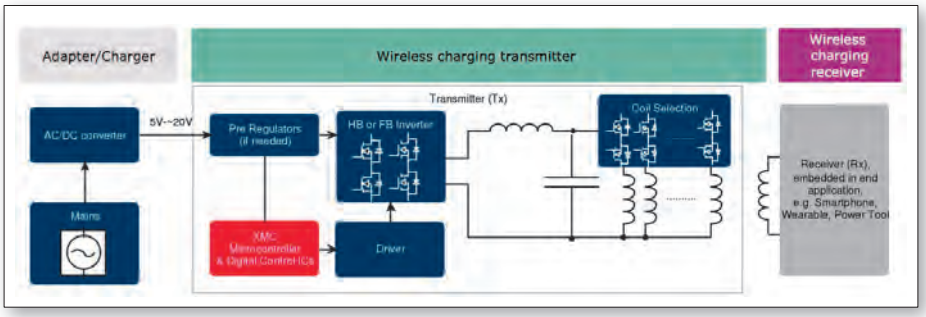

Figure 2. Typical wireless charging systems consist of three main elements.

suited to general-purpose wireless charging stations, such as those found in public places where a wide variety of devices could be charged. Class D is suitable for a wide range of power levels. In contrast to the Class D topology, Class E is optimized for a particular design point and, at this point, will show greater efficiency. However, the Class E efficiency falls off more rapidly away from this point. Thus this topology is best suited to high power and for 1:1 charging of a specific device that is either charged close to target power or not charged at all. The BOM costs associated with Class E are very similar but tend to be slightly lower than those of Class D. The Infineon product range includes an extensive suite of solutions for wireless charging transmitters and chargers that give designers the ability to use components and subsystems with known compatibility. Central to the transmitter design is a microcontroller for system control and intelligence. The Infineon XMC range includes the XMC1400 and XMC4400 that are suited for wireless charging via Class D and E topologies. The MOSFETs are directly driven by EiceDRIVER gate drivers that translate the microcontroller signals. Class D uses the new 2EDL71 and Class E uses the established 1EDN. The company is well known for their extensive MOSFET range. Designers are presented with significant choice of package size as well as RDS(ON) and Qg and voltage classes from 30V to 250V. As such, designers are able to design wireless chargers with the same base technology at multiple power levels. Class D or E power inverters (as well as synchronous rectification topologies) are best served by OptiMOS technology and CoolMOS devices are very suitable for ACDC adapters. Infineon also offers a range of flyback controllers for the power adapters that work well alongside the CoolSET integrated IC and power stage.

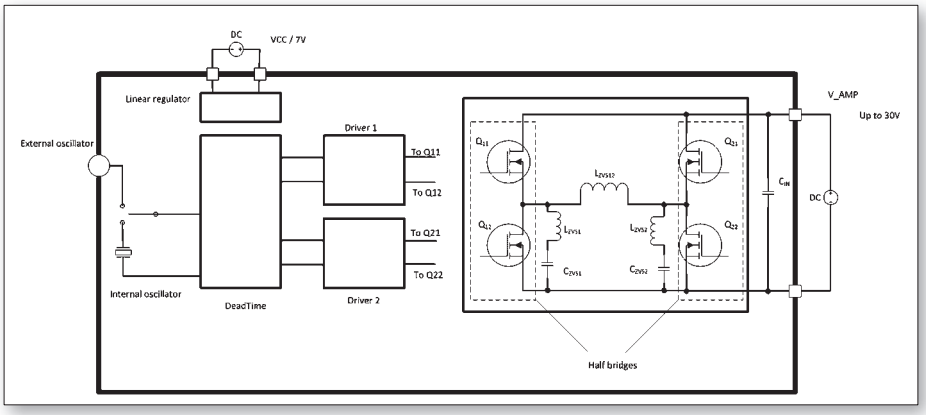

Figure 3. Simplified block diagram of the Class D test board

Apart from the technical challenges, designers are being required to bring new designs to fruition in ever-shortening timescales. To support this, a test board for a Class D transmitter was developed that allows designers to get a head start in designing wireless charging solutions. Designers that want to evaluate the performance of Infineon MOSFETs in a Class D configuration power amplifier will find the board a very valuable resource. The board comprises two half-bridges formed from two 80V 2x2 Infineon MOSFETs (IRL80HS120) as well as related drivers making prototyping a simple task. Users can evaluate either single-ended configurations (only one half-bridge is active) or differential configurations (both half-bridges are active), making the switch between the two easy. Users can rely on the embedded 6.78 MHz oscillator or use an external pin and BNC connector to inject other frequencies from a waveform generator. Everything needed for zero voltage switching (ZVS) power solutions are included with the board. There is even an on-board linear regulator to supply the board logic with a stable supply voltage. If a wireless charging capable receiver device is available then a complete wireless charging design can be created using the second BNC connector to connect and evaluate external transmitting coils for wireless power transfer.

Many consumers consider that the ability to wirelessly charge mobile devices is long overdue. The recent consolidation and advancements of the relevant standards has played a large part in moving towards a truly wireless society. Leading semiconductor companies, such as Infineon, have brought their broad strengths in power and magnetic design to bear on finding solutions. Drawing on their extensive experience of microcontrollers, MOSFETs and drivers they now offer a fully integrated solution with components that have demonstrated compatibility. Beyond this, Infineon is also releasing valuable design tools such as their Class D test board that allows designers to rapidly prototype and evaluate wireless charging systems. ■

Selecting sense resistors for motor control with reinforced isolation

By Cathal Sheehan, Bourns Electronics **and Nicola O'Byrne,** Analog Devices

This article summarizes the differences in standards between traditional optocoupler-based technologies and inductive and capacitive technologies for reinforced isolation. It describes a system using digital control of a motor drive that incorporates current sense resistors for sensing winding current, and recommends how to select the best resistor for this application.

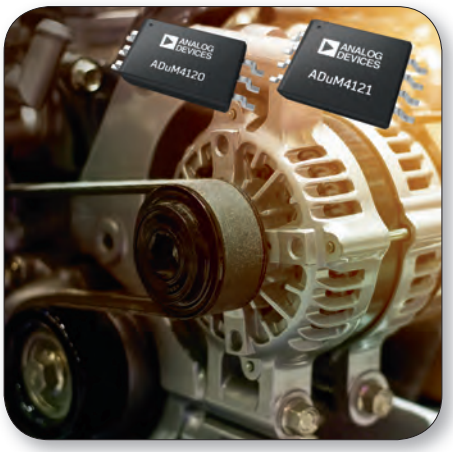

■ The use of current sense resistors is part of a trend in motor control system design that benefits from adopting new digital isolation technologies. These technologies offer higher reliability levels to designers based on the introduction of the component level standard IEC 60747-17, which specifies the performance, test, and certification requirements for capacitive and magnetically coupled isolators. Digital isolation offers other benefits such as faster loop responses, allowing for integrated overcurrent protection, as well as narrower dead times. This enables smoother output voltages that, in turn, provide better control of torque. Designers of motor drives are most likely aware of the need to comply with international standards for isolation. Isolation is necessary for a number of reason. 1) It prevents electrical noise from the ground connection of a high-power circuit being induced onto a low power signal line. 2) It provides electrical safety for end users by preventing dangerous voltages and currents from transferring to a benign, low voltage environment.

The IEC 61010-1 Edition 3 standard specifies that the system-level designer must be aware of the distances between conductors, through air (clearance) and over surfaces (creepage). It also stipulates they must know the separation between conductors and metallic parts in potting, molding compounds, and thin film insulation. A designer should ensure that the chosen components guarantee a certain level of safety if they are being used on systems compliant to IEC61010-1, according to the industry accepted time-dependent dielectric breakdown (TDDB) analysis, which then helps to extrapolate the device lifespan and continuous working voltage (VIORM).

While IEC 60747-17 (DIN V VDE V 0884-11) was adopted to specifically define insulation using inductive and capacitive technologies, the well-established IEC 60747-5-5 standard was used to define the insulation using optocoupler technologies. However, IEC 60747-5-5 does not specify the TDDB analysis to determine the continuous working voltage or lifetime. It relies on the partial discharge voltage test to establish the working voltage, but does not define the working lifetime of the device. Hence, inductive and capacitive technologies have a minimum rated lifetime of 37.5 years, while there is no definition for optocoupler-based isolators. Table 1 summarizes the key differences between optocoupler and non-optocoupler-based standards. The conclusion is that non-optocoupler-based standards will gain more acceptance over time as they offer greater security to design engineers and longer operating lifespans. Figure 1 shows a typical three-phase permanent magnet motor drive using sense resistors for measuring the winding current and with feedback through the Analog Devices AD7403 isolated Σ-Δ modulator and a sinc3 filter. The AD7403 uses a single second-order modulator digitizing circuit that converts the analog signal from the sense resistor into an isolated single-bit pulse stream, which scales according to the full-scale input voltage range. The sinc3 filter then extracts the average value of the current, while eliminating noise created by inverter switching. It can store a 16-bit integer representing the current in memory and, at the same time, it can compare the number with a reference representing current limits and send an alert via a separate pin during overload conditions. The use of shorter filters for overload monitoring, in parallel with the measurement filter, allows alert latencies to be reduced. The AD7403 has reinforced isolation allowing the current sense resistor voltage to be measured directly by the modulator with no extra components apart from a simple, discrete, low-pass filter, comprising a resistor and capacitor. The specified maximum operating voltage of the modulator is ±250mV, which requires that the resistance value of the current sense resistor to be less than 250 mV/I_{MAX}.

Given that the output of the AD7403 is a 16-bit number, the potential accuracy of the current measurement is limited not by the ADC conversion, but by the voltage reading itself. The

Specification	IEC 60747-17		IEC 60747-5-5
	Basic Isolation	Reinforced Isolation	Reinforced Only
Partial Discharge Test	1.5 × VIORM	1.875 × VIORM	1.875 × VIORM
Working Voltage (VIORM)	Based on TDDB* analysis	Based on TDDB* analysis	Based on PD** test
Minimum Rated Lifetime	26 Years	37.5 years	Not defined
Failure Rate over Lifetime	1000 ppm	1 ppm	Not defined

*Time dependent dielectric breakdown.
**Partial discharge.

Table 1. Key differences between optocoupler and non-optocoupler-based isolation

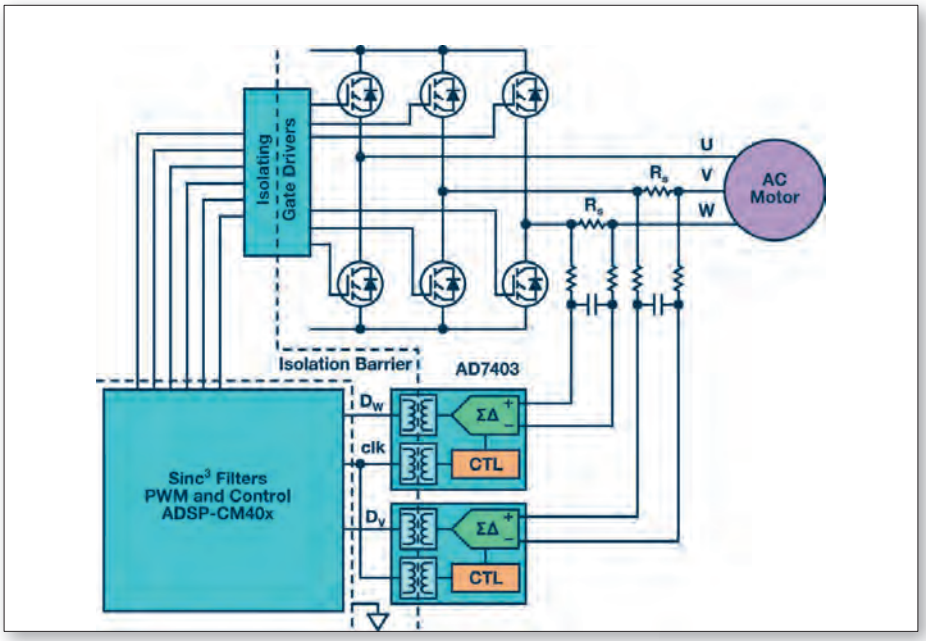

Figure 1. Block diagram of three-phase motor drive with digital isolation and sense resistors

drift of the resistance with temperature will vary depending on the material used in the resistor element, as well as the power rating and the actual physical size of the component. Resistive elements made up of special alloys of nickel, copper, and manganese have parabolic resistance drift curves, as shown in figure 2. These alloys are the most accurate materials used for current sensing applications. Figure 2 also shows the upper and lower limits of resistance drift of a Bourns model CSS4J-4026R resistor, corresponding to a temperature coefficient of 50 ppm/°C. This gap is caused by the copper terminals of the resistor, which increase drift due to the high TCR of copper (4000 ppm/°C). The Bourns model CST0612 series is a 1W, 4-terminal resistor made from a special alloy. It measures 3.2mm × 1.65mm, has a TCR of ±100 ppm/°C, and the difference in TCR between Bourns model CST0612 and model CSS4J-4026R can be explained by the proportion of copper, with respect to the resistive element. The additional copper with its low thermal resistance helps the component absorb the high power without overheating. This example demonstrates the trade-off between the size of the component, the power rating, and the drift in the resistance value over temperature.

Let us use Bourns part number CSS4J-4026R-L500F for calculating the resistance drift at full power and at an ambient temperature of 70°C. CSS4J-4026R-L500F is a 0.5 mΩ (±1%) sense resistor rated to 5 watts of power, at a maximum ambient temperature of 130°C. It derates from 100% power to zero W at 170°C. The thermal resistance of the component therefore, is 8°C/W. At full power and an ambient temperature of 70°C, we can expect

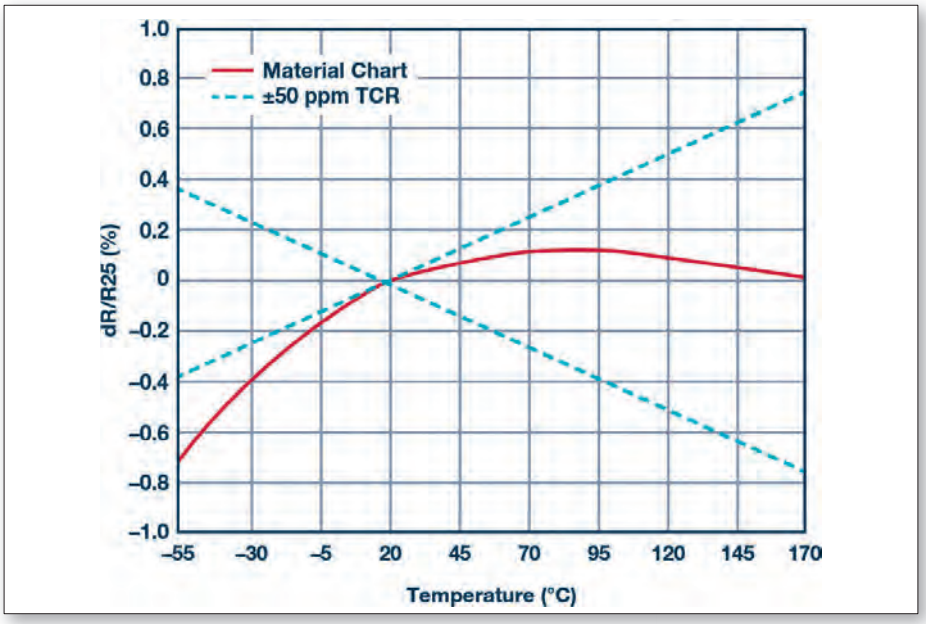

Figure 2. Parabolic TCR curve of Bourns model CSS4J-4026R current sense resistor

the surface temperature of the component to reach 110°C (70°C + 8×5°C). The drift in resistance at 110°C can be taken from figure 2, which is +0.45% of the nominal value at 25°C. The absolute tolerance is ±1% and therefore, the accuracy of the current measurement will be a maximum of +1.45%.

Motor drives will experience short circuits from time to time, and the current sense resistor must be able to handle short overloads without being damaged. Using the Bourns model CST0612 current sense resistor as an example, it is possible to calculate the mass of this component from the material data sheet on the Bourns website at 0.0132g. Alternatively, it can be calculated from the dimensions, and the density of copper and alloys (8.4 g/cm3). The rate of rise in temperature can be calculated by the following:

$$\frac{dT}{dt} = \frac{P}{mC}$$

Where P is power (watts), m is the mass of the component (g), and C is the specific heat capacity of the metal alloy. An overload of 50A in a resistance of 1mΩ, would create a 462°C per second temperature slew rate. Assuming a steady state temperature of 50°C, the width of the short circuit period cannot exceed 0.22 seconds. This can be extended by increasing the overall mass through copper plating on the circuit board. A thicker, larger part such as model CSS4J-4026 with a mass of 0.371g would have a temperature slew rate of 16.5°C per second, given the same overload. Assuming the component had a surface temperature of 100°C, it would handle the energy for up to four seconds before the surface temperature reached the maximum allowed value of 170°C.

The AD7403 has a full-scale input of ±250 mV from the resistor. The following matrix in table 2 outlines the voltage drop at maximum current across Bourns high power, current sense resistor models. The designer can compensate for lower voltages by adjusting the scaling factor.

According to IEC60747-17, the minimum lifetime of a digital isolator rated to reinforced isolation should be 37.5 years. While there is no such reference for more traditional optocoupler technologies, designers should feel more confident about working with digitally isolated systems in the future. Current sense resistors made using special alloys have low resistance drift over temperature, and produce output voltages which can be read with an adjustable scaling factor by an isolated Σ-Δ modulator, such as those using Analog Devices iCoupler technology. The accuracy of the current measurement will depend on the temperature of the resistor, which in turn depends on the power as a proportion of the power rating, as well as on the ambient temperature. ■

Product News

■ Microsemi: PolarFire FPGAs now interoperate with AD9371 wideband RF transceiver

Microsemi announced its cost-optimized, low power, mid-range PolarFire field programmable gate array is now interoperable with Analog Devices' AD9371 wideband integrated radio frequency transceiver via a JESD204B interface. Customers considering the AD9371—which offers dual channel transmitters and receivers, integrated synthesizers and digital signal processing functions—can utilize Microsemi's PolarFire FPGAs to interface and interoperate with JESD204B, while utilizing lower power implementation than competing devices.

News ID 5589

■ TI introduces most affordable way to get started with DLP Pico display technology

Texas Instruments opened the door for developers to implement high-performing DLP display technology with virtually any low-cost processor. The new 0.2-inch DLP2000 chipset and DLP LightCrafter Display 2000 evaluation module now make it more affordable to leverage DLP technology and design on-demand, free-form display applications such as mobile smart TVs; pico projectors; digital signage; projection displays for smart homes, smartphones and tablets; and control panels and Internet of Things display solutions.

News ID 5502

■ Mouser stocks Infineon's XMC1400 MCUs for industrial applications

Mouser Electronics is now stocking the XMC1400 industrial series microcontrollers from Infineon Technologies. Members of the XMC1000 family, the XMC1400 series devices offer greater control performance and additional connectivity tailored to applications such as LED lighting, digital power conversion, motor control, industrial automation, and human-machine interfaces.

News ID 5470

■ Premier Farnell now stocking Xilinx All Programmable devices

Premier Farnell announces the addition of Xilinx All Programmable Devices to their extensive product offering. By adding Xilinx to their growing list of global franchised suppliers, Premier Farnell are giving their customers access to their market leading devices that provide both design flexibility and freedom.

News ID 5572

■ Silicon Labs collaborates with Microsoft to accelerate IoT solutions

Silicon Labs has joined Microsoft Azure Certified for Internet of Things, ensuring customers get IoT solutions up and running quickly with hardware and software that has been pre-tested and verified to work with Microsoft Azure IoT services. Microsoft Azure Certified for IoT allows businesses to reach customers where they are, working with an ecosystem of devices and platforms, allowing faster time to production.

News ID 5585

The successful form factor SMARC 2.0: where does it stand today?

By Martin Unverdorben, Kontron

The new SMARC standard 2.0 was introduced in June 2016. Besides important improvements and technical updates, it also threw open the door to the Internet of Things (IoT). One year later it is now time to assess the acceptance of the Smart Mobility Architecture Standard 2.0.

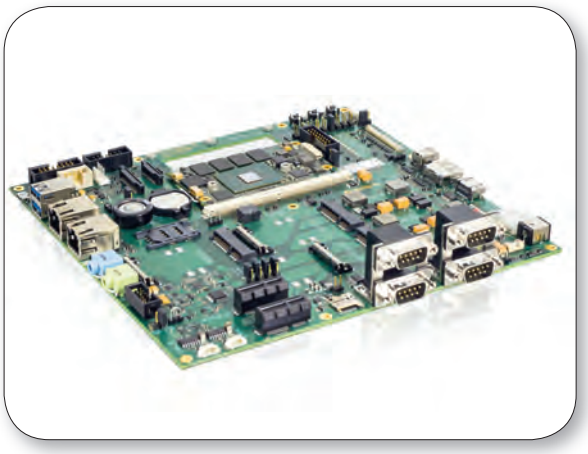

Figure 1. The new evaluation carrier board from Kontron is based on the current SGET SMARC 2.0 specifications.

■ Connected high-performance embedded systems have become the norm in many industrial and everyday products. These mini-computers make many IoT applications possible in the first place as they are extremely compact, very robust, and come with enormous performance reserves. Evaluating and analyzing the data they collect can unveil optimization potentials for companies and thus contribute directly to corporate success. Many embedded systems are based on SMARC, a standard form factor for Computer-on-Modules (COMs). SMARC is used from automation solutions to graphic and image-centered devices that require very low energy consumption and have to withstand extreme environmental conditions. The modules serve as building blocks for very small portable handheld devices, as well as larger systems whose energy consumption should not exceed a few watts while still maintaining high computing performance. SMARC modules therefore offer unimagined opportunities that are far from exhausted.

Since its introduction in 2013, the SMARC standard has been one of the innovation drivers in the ultra-low-power embedded market. Development of the small boards advances rapidly. The new version 2.0 of the SMARC embedded computer format was introduced in June 2016 by the SGET (Standardization Group for Embedded Technologies e.V.) Standard Development Team 0.1 (SDT 0.1). It features important innovations that make the platform even more interesting, especially for modern IoT applications. Kontron presented the SMARC Evaluation Carrier 2.0 for ultra-low-power COMs at embedded world in Nuremberg in March 2017. The new evaluation carrier board offers a head start to designing embedded applications based on the SMARC 2.0 platform. The SMARC Evaluation Carrier 2.0 thus is the suited foundation for the development of already available SMARC-sXAL modules with the new Intel Atom processor family, for future SMARC modules and other individual solutions. It also gives an extremely broad choice of interfaces.

With the SMARC Evaluation Carrier 2.0, developers only have to choose the SMARC module that best fits the desired application requirements, set it up, and start working on the latest technological level. Kontron will release a starter kit based on the SMARC Evaluation Carrier 2.0 in the near future. It will be immediately deployable according to the plug-and-play principle and – like its predecessor that is based on the first SMARC version – come equipped with all necessary components to facilitate evaluating processors. Notably, the SMARC 2.0 specifications offer a new pin assignment as well as improved processor interfaces that harmonize with the original 2013 standard set for low-profile form factor modules. Various rarely used and partially outdated interfaces have, in turn, been removed. The goal in updating the standard was to realize a new pin assignment while remaining as compatible as possible with the V1.1 assignment. Accordingly, selected V1.1 pins that had seldom been used found a new purpose in SMARC 2.0, permitting new interface detection. The possibility of damage from using older modules in V2.0-compatible carrier boards or the other way around should be ruled out in any case.

Today, however, the 314 contacts of the SMARC connector do not only have to support ARM and be compatible with this processor architecture but with x86 as well – two distinctly different SoC architectures. The connector, for example, has to ensure a high signal integrity degree for ARM while supporting MIPI display interfaces, camera interfaces, multiple SPI connections, and SDIO interfaces. At the same time, it has to be compatible with x86 requirements such as, for example, numerous USB and PCI Express lines. SGET has answered these challenges with an update of the original specifications based on valuable feedback from many developers and users over the last three years.

Figure 2. The newest product Kontron SMARC-sXAL with the latest Intel processors

The latest specification and the first products based on it prove again that the SMARC standard is not, and cannot be, a rigid entity. A uniform ARM-COM standard for the industry is still necessary as the different interfaces of ARM and x86 often require specific implementation; but new interfaces need a future-oriented pinout. The fast development cycle and rapid market acceptance show that the SMARC approach has hit a customer nerve. However, such a standard has to be alive. It must keep up with the industry and react to new market requirements. Without a doubt, SMARC 2.0 will be the foundation for many pioneering and highly developed applications in the coming years. Kontron will remain a SMARC innovation driver. It already introduced the first SMARC 2.0 Computer-on-Module based on the latest Intel processor generation in November 2016. Like all current Kontron embedded boards and controllers, it is IoT-ready and profits from deep software integration. Besides the SMARC Evaluation Carrier 2.0, Kontron introduced its planning for the coming SMARC-2.0-based boards in March 2017. The Kontron SMARC-sXAL modules with the latest Intel processors (Atom, Celeron, Pentium) are already available. Equipped with current image processing and graphics capabilities, the SMARC-sXAL offers comprehensive real-time computing power in an energy-efficient and standardized Computer-on-Module form factor. Users profit from significantly increased computing power, an impressive performance-per-watt ratio, and long-term availability.

What is more, the company has announced a SMARC 2.0 product line with NXP i.MX7 low-performance processor optimized for networking tasks at the embedded world 2017; it will be available soon. Another version with ARM processors that meets demanding graphic tasks with higher performance is in the planning stages. All new Kontron SMARC 2.0 modules can be equipped with the original security solution Approtect which protects data and application integrity end to end. With Kontron Approtect Licensing, new business models such as licensing or pay-per-use can easily be implemented. A look at the Kontron product roadmap shows that SMARC 2.0 has already arrived at the vendors. With the technical innovations, it will not be long until customers can enjoy the advantages of the updated specification as well. ■

Product News

■ MEN: new PICMG Standard cPCI Serial Space is ratified

The newest PICMG standard cPCI Serial Space, CPCI-S.1 R1.0, was now officially ratified. The extension of the CompactPCI Serial standard was initiated by a large-scale project over 900 satellites of an Internet supplier and has now successfully been finished by the members of the PICMG working group.

News ID 5588

■ Supermicro: server and storage solutions supporting new Intel Xeon scalable processors

Super Micro Computer released a comprehensive line of new X11 generation server and storage solutions featuring the new Intel Xeon scalable processor family with the strongest support for NVMe storage and 100G/25G Ethernet in the industry. The portfolio supporting the new processor family includes: 1U/2U Ultra SuperServers; BigTwin in a 2U 4-node design with support for 24 DIMMs, six hot-swap NVMe drives and flexible networking capability for each node; 4U FatTwin in a variety of I/O, memory and storage combinations for most optimized cloud, HPC and Enterprise applications; SuperBlade - 2 and 4-socket Xeon blade servers supporting 205W TDP CPU, NVMe, with integrated 100G Intel Omni-Path switch, 100G EDR InfiniBand switch, 25G/10G Ethernet switches, redundant AC/DC power supplies, and Battery Backup, making them ideal for Enterprise, Cloud…

News ID 5456

■ Vecow: PCI Express frame grabbers and Mini PCIe expansion modules

Vecow launches PCI Express and Mini PCIe expansion modules, SE-1000, PE-3000, PMX-100, UMX-100 and SMX-200. Featuring 4-port independent GigE PoE+, dual LAN Bypass mode, 2-port 10GigE LAN, 2-port GigE PoE+, 2-port USB 3.0 and 4-port isolated COM RS-232/422/485, up to -40 to 85°C operation, Vecow PCI Express Frame Grabbers and Mini PCIe Expansion Modules enable a faster time-to-market solution to make Machine Vision, Intelligent Surveillance, Smart Manufacturing, Factory Automation, Intelligent Control, Industrial Ethernet or any Industry 4.0/IIoT applications possible.

News ID 5449

■ congatec begins industrial market transition to 10 GbE bandwidth

congatec announces its new extended roadmap for bringing 10 GbE interconnectivity to the industrial fields. Developed to enable embedded system engineers to design small form factor edge nodes with a low power envelope of less than 20 watts, congatec is breaking new ground to realize the industry vision of entirely enclosed, fanless infrastructure components.

News ID 5586

■ A.R.Bayer DSP Systeme: audio processing module with SHARC, stereo audio, and S/PDIF

SHARC Module with stereo audio and S/PDIFThe SHARCaudio module is a very small, low-cost, audio processing system which can be operated in stand-alone or embedded applications. It comes with a powerful 200MHz (266MHz optional) SHARC DSP and a 24-bit stereo audio codec (> 100dB dynamic range) with line-in and line-out channels, an S/PDIF interface, I²C, UART and SPI for best connectivity.

News ID 5549

Portwell: rugged fan-less embedded system with wide voltage of power input

Portwell announces the release of the WEBS-21D0, a fan-less embedded system featuring Intel Atom processor E3900 series. Its rugged, compact design, plus low power consumption, make WEBS-21D0 a perfect solution for applications in kiosk, digital signage, in-vehicle mobile video surveillance, medical, and the harsh environments of factory automation.

News ID 5546

Kontron: HMI product families in widescreen and standard aspect ratios

Kontron has introduced two ranges of robust, industrial grade Panel PCs and monitors, which are a direct result of the portfolio harmonization after its recent merger with S&T Group. The Kontron FlatClient and FlatView series offer maximum flexibility in an attractively priced package. Both are market proven solutions, with a large number of devices currently in operation in the industrial field.

News ID 5435

Vecow launches ECS-9160 series LAN switch system

Vecow debuted her ECS-9160 LAN Switch Fanless Embedded System. With workstation-grade Intel 7th/6th Generation Xeon/Core i7/i5/i3 processor, 4 GigE LAN Switch with PoE+, supporting LAN Bypass mode, fanless -40 to 75°C operating temperature, outstanding system performance, excellent mobile availability, all-in-one integrated features, multiple I/O connection, flexible expansion features, smart manageability, 6V to 36V power input with 80V surge protection, ignition power control, intelligent circuit protection and rugged reliability…

News ID 5562

MEN: high performance - 16 cores on 6U VMEbus with Intel Xeon D

The new multicore SBC A25 from MEN offers up to 16 independent CPU cores, a variety of I/O options and an FPGA-based VMEbus interface. The board is already used by the Swiss research institute CERN in the world's largest particle accelerator due to its extreme computing power. The A25 is a powerful multicore VMEbus board, based on Intel's Xeon D-1500 server CPU. The board is available in versions with 4, 8 and 16 cores and thus provides a concentrated computing power. The 32 GB DDR4 memory and the scalability of the offered standard models make the board a reliable partner.

News ID 5439

ADLINK: PCI/104-Express SBC provides three digital display interface channels

ADLINK has introduced a new PCI/104-Express Single Board Computer featuring 6th Gen Intel Core processors and supporting up to 16 GB of DDR4-ECC soldered memory. The CMx-SLx delivers ruggedness by design and offers an extended lifecycle for industrial automation, transportation, energy, and defense applications requiring ultra-rugged stability with the added benefit of lower power consumption.

News ID 5571

IBASE: 7th/6th gen Intel Core expandable modular fanless Box PC

IBASE announces its brand new AMS300 series expandable modular box PC. The AMS300 is a compact, yet expandable fanless system designed for industrial control and measurement processes in smart factory automation applications. It is powered by 7th/6th Gen Intel Core i7/i5/i3 processors and comes integrated with 8GB memory as well as 64GB of industrial-grade SSD storage.

News ID 5580

SINTRONES: ultra slim box PCs with Intel Gen 4 Dual Core Celeron

SINTRONES announce the new SBOX-2600 and SBOX-2620 series Fanless Box PCs. These new series bring advanced technologies and performance into a dense, ultra slim pc box and are perfect for multiple scenarios on industrial automation digital signage and outdoor video surveillance. What's more, these series have Intel vPro / iAMT 9.5 optional model version and broad integration of 3G/LTE, WiFi, Bluetooth module, Video capture card with ultra slim (48mm) compact size.

News ID 5422

RuggON announces VX-601 rugged in-vehicle terminal

RuggON launched a new rugged in-vehicle terminal, the VX-601, which provides superb visibility from a large, bright, sunlight-readable touchscreen display; great durability; seamless connectivity and communications; as well as smart power management. The VX-601 is suitable for challenging environments and diverse applications such as intralogistics, cold chain logistics, waste management, mining, harbor freight handling, agriculture and construction.

News ID 5437

Cincoze: convertible Embedded computer for factory and machine automation

Cincoze is unveiling all-new convertible Embedded Computer "P2000 Series". Designed to be positioned as "One Computer, Two Appliances", it can be used as both a "Slim type embedded computer" and as a "Panel PC." A modern fully-automatic machine requires an embedded computer for data processing and a panel PC for HMI operation, the P2000 Series provides the seamless integration of a complete system with the same hardware for the ease of maintenance and device management.

News ID 5532

IP-classes in rugged computing

By Angela Hauber, MEN Mikro Elektronik

Far away from protected server rooms or automation lines in air-conditioned production halls, embedded computers need to withstand the toughest conditions in modern vehicles and moving machines, or in installations outdoors such as railways.

Figure 1. The robust BC50R box PC resulted from a customer project and is now also available as a standard product.

Control systems in mining vehicles need to be protected from dust, heat and shocks of up to 5g; computers at sea, e.g. on oil platforms, are exposed to constant salt spray and moisture (or, of course, oil); systems in busses and trains must be able to withstand constant vibrations and sometimes sharp and rapid temperature fluctuations. Even operator terminals in combine harvesters or hospitals should be able to withstand chemical influences such as pesticides or disinfectants. All in all, there are three principal areas that are of major importance with regards to rugged computing.

Extended temperature range. Unless otherwise required by the application, the standard for industrial electronics is -40°C to +85°C, rising to as much as +125°C for near-engine electronics in the automotive sector and even ranging from -55°C to +125°C for aviation and shipping. The railway standard EN 50155 stipulates an operating temperature of -40°C to +70°C – and 10 minutes at up to +85°C in the Tx class.

Protection against dust, damp and chemicals. The components of the system should generally be conformally coated. Depending on the requirements and the IP protection class, further protection can be provided by sealed housings. IP classes are always made up of two digits. The first stands for protection against foreign bodies (such as dust) and contact; the second stands for protection against water. Protection against impact and vibration. Individual components must be screwed in tightly or soldered; moving parts are generally to be avoided. Plug-in cards and adapters have screw-mountable sockets. Robust plug connectors, e.g. M12, that are screwed in tightly and withstand strong vibrations, are available for cable connections.

Other aspects to be considered are protection from electrical interference, electromagnetic compatibility (EMC) and fault-tolerant behavior, e.g. towards short-time power failures, as well as maintenance-free or maintenance-friendly designs that exclude or at least reduce the number of fans and other fault-prone components, for example. A good example of the importance of housing tightness in accordance with IP protection classes is that of a diagnostic system for ships and yachts. The system is connected via CAN to the ship engine and collects status/diagnostic and error data which are then sent to mobile displays via Wi-Fi and LTE. The ship crew, both in the control room and on deck, then use the data for monitoring, remote maintenance and, if necessary, repairs on board. The system was implemented in a box PC measuring 250mm x 220mm x 48.1mm. In addition to an extended temperature range, flexibility in terms of interface assignment and a wide-range power supply, the most important requirement of the box PC was its impermeability in accordance with IP65 and EMC conformity in line with EN 60945 (maritime navigation and radiocommunication equipment and systems) and Germanischer Lloyd. As a standard product, the box PC goes beyond the customer-specific requirements of the project, and complies with EN 50155 (Railway) and ISO 7637-2 (Automotive).

The IP65 class, i.e. complete protection against dust ingress and protection against water jets, was achieved by means of an 8mm-thick aluminum housing (a wall thickness of 2mm suffices for standard box PCs), which seals the PC on all sides with screws and silicone-filled contours. The thickness of the housing walls and the number and position of the screw fittings determine the contact pressure that can later be applied to the housing without the contact on the touch points and therefore the impermeability being lost. EMC protection can be achieved through conductive silicone material with silver particles. However, even if the required IP65 protection class is achieved by means of the later contact pressure and surrounding seals on all points of contact, the box is not completely airtight in spite of all this. This is a decisive criterion in which pressure compensation plays a key role. Due to thermal expansion and contraction of the materials caused by temperature fluctuations

Figure 2. The pressure compensation valve on the rear of the BC50R

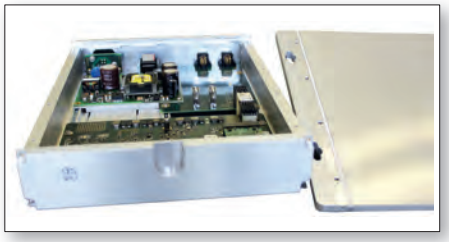

Figure 3. Inside the BC50R. The 8mm-thick aluminum parts are tightly sealed with silicone cords and screw fittings.

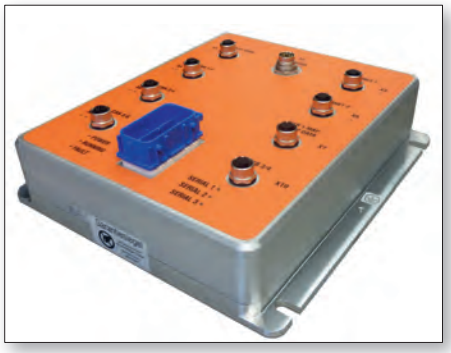

Figure 4. Housing example for IP67.

(or equally by altitude differences in aviation), small amounts of air would be sucked in through the seals, thus bringing moisture into the interior of the housing from where it can no longer escape. To prevent this, a pressure compensation valve was installed on the rear of the housing. This ventilates the housing just enough to allow condensation to be kept to a minimum. Higher IP classes (such as IP67, which can withstand brief submersion in water) can be achieved by casting the entire housing – except for a cover with the connector plugs – from a single mold.

To protect the housing against external environmental influences, such as chemicals, pesticides or the previously mentioned salt spray, for as long as possible, the right aluminum alloy and/or selection of special protective coatings is required in addition to the appropriate degree of housing impermeability. These are largely standardized, depending on the industry. Smaller parts such as screws are included – if they were made of steel, it would not take long for rust to form. Additional protection of the electronics from moisture through (conformal) coating is not required within a housing with a correspondingly high IP level. However, it may be required depending on the industry and application. For example, EN 50155 prescribes coating of all components – regardless of the housing in which they are located.

The connectors on the front also pose a challenge when it comes to meeting the IP class. Unused interfaces can be protected using appropriate cover caps. For all interfaces used, the plug connection, along with the connecting cables themselves, must be sealed in such a way that it also conforms to the IP class. Interface connectors such as USB, DisplayPort or RJ45, which will be familiar from the consumer or industrial sectors, are out of the question in this respect. Some of these connectors are available in many sealing classes – but cost up to 10 times more than usual robust connectors for harsh environments and even then, require special designs. This usually results in M12 connectors being chosen – as in the case of the box PC on the high seas. These connectors can be sealed up to IP76 and even work reliably under severe impacts and vibrations. The similarly round MIL/Aero-compliant connectors, which are familiar and required in the aviation and military sectors, are even more resistant. So as not to be subject to any restrictions on input/output when using M12 connectors, the pin assignment must be defined by the manufacturer and written into the user manual. The connections for the various protocols run via appropriate adapter cables – which is where the next trick comes in. To port from USB 3.0 to M12, it is important to note, for example, that due to the high speed of USB 3.0 (and the lack of standardization, as is the case with Ethernet connections for M12 connectors), the adapter cables contain twisted pairs which provide better protection against electrical and magnetic interference fields than parallel conductors.

Tightly sealed embedded systems inevitably raise the issue of heat dissipation. If there is merely a small valve ensuring pressure compensation – and thus virtually no air circulation – how can the electronics be cooled? The solution is conduction cooling, which is also the reason why a heat-conducting aluminum housing is used in all robust designs. For this reason, it is essential that components that produce heat are thermally connected to the housing, as a result of which the device itself becomes the heat sink. This technology is not limited to box PCs – it can also be implemented with 19" components (CompactPCI/CompactPCI Serial) or COM Express modules (Rugged COM Express). ■

Scalable gateway solutions: IoT migration made easier

By Christian Eder, congatec

More manufacturers of computer technology for harsh environments are expanding their hardware offerings with the right glue logic to develop IoT solutions. congatec advocates vendor-independent standardization to ensure that these solutions remain scalable in line with requirements.

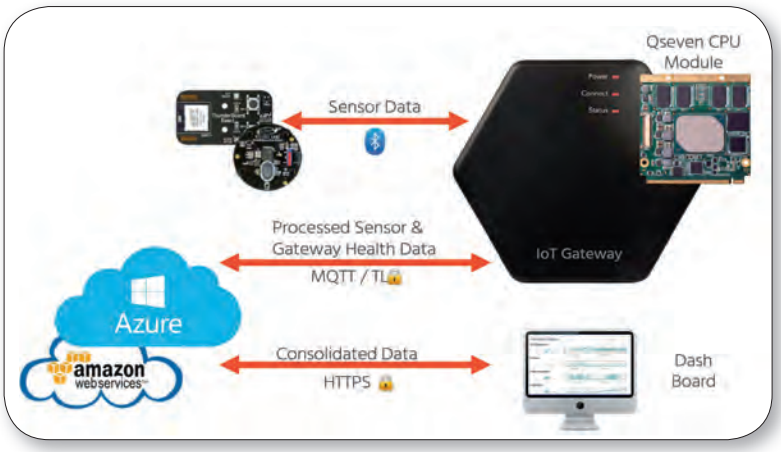

Figure 1. The congatec Cloud API for IoT Gateways enables universal integration of heterogeneous sensor networks and various database implementations in IoT clouds. The software modules are freely programmable and can be used to directly access the IoT gateway and its data as well as the connected sensor networks.

■ Machine and system providers need a flexible and scalable migration path to develop their IoT offering. It is an advantage if they have access to application-ready platforms that scale on demand and can both integrate existing sensor systems and support new solutions. Modular embedded computer technology based on Computer-on-Modules is ideal for such solutions as it allows highly flexible configuration to meet the application and performance demands, while also enabling cost-effective implementation of customer-specific carrier boards.

However, modules and matching carrier boards alone do not make an IoT gateway solution; standardized, application-ready, hardware abstraction middleware is also needed. That's why it makes sense for embedded manufacturers to provide their OEM customers with the right glue logic enabling them to implement their IoT solutions from sandbox to a fully connected cyber-physical factory. Such standardized middleware ensures that applications can be deployed on suitable hardware without changing the hardware access logic. But currently there are standards set for such middleware, which results in proprietary solutions that would tie machine and automation providers too closely to one embedded computing vendor. With the necessary investments easily reaching the upper five-digit range in such a middleware, OEMs cannot take decisions lightly. Much more appealing solutions are those that can be implemented either through open source projects or directly through standardization committees such as the SGET, the PICMG or future new committees. As always, someone has to take the first step towards standardization. For this reason, congatec has developed a special Application Programming Interface (API) with which to connect devices, machines and systems requiring a flexible IoT gateway to the cloud. It can integrate both smart sensor networks as well as existing smart peripherals. It serves as a framework for users to implement gateway functionality in their machines and systems on the basis of application-ready logic.

The hardware abstraction provides standardization for the application software, which also ensures its portability. The new Cloud API has an application-ready and open design. This allows the integration of a wide range of wireless sensor connections, such as Bluetooth LE, ZigBee, LoRa and other LPWANs, as well as wired protocols for building and industrial automation. Even heterogeneous protocol configurations and communication with other gateways are possible. Typical applications can be found in Industry 4.0 connected machines and systems as well as in intralogistics systems. On request, OEMs can obtain all required software modules in C++ source code, which significantly simplifies the development of own IoT applications for Linux and Windows based on this application-ready reference design. Additional software services are provided for the Cloud API and cloud connection, if required. The provision of the code is the first step of congatec towards vendor-independent standardization. The second step is building alliances with partners such as iesy or Technagon, as well as the integration of these partners or concepts agreed with others into cross-vendor initiatives such as SGET. The company has also set itself the goal of defining further standards beyond the board and module level in order to facilitate the use of embedded computer technology even more. The new Cloud API can be integrated into dedicated gateways from congatec as well as customer-specific designs and existing

Figure 2. Standardized and freely programmable IoT APIs make OEMs independent from specific manufacturers or hardware. Four IoT gateways, which are suitable for use with the new Cloud API for IoT Gateways, come from congatec, Technagon, iesy and EXPEMB (from left to right).

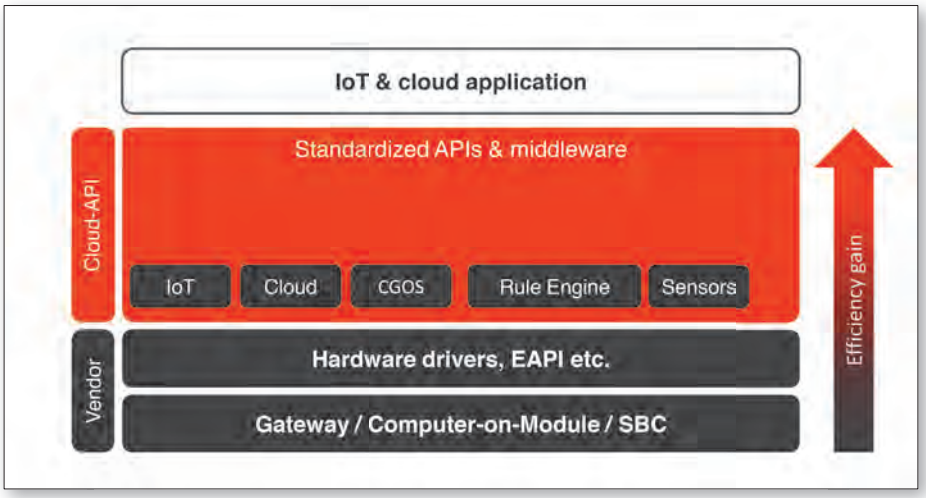

Figure 3. It is necessary to establish additional standardization of APIs and design-ins beyond the core standards in order to further simplify the development of custom-specific applications based on standardized embedded computing building blocks.

hardware platforms based on congatec hardware. For this purpose, real-time hardware virtualization is also supported. Existing solutions include the IoT gateways from Technagon, iesy, EXPEMB and congatec.

The IoT gateway from Technagon featuring the new Intel Atom Celeron or Pentium processors is based on the latest SMARC 2.0 standard and uses the new SGET eNUC standard for a standardized box PC design. Despite its small footprint of only 104 x 104mm, it supports up to three radio standards with up to six antennas. In order to meet the different requirements in the industrial environment, the box PC is available in numerous housing variants for wall, DIN rail or Vesa mounting as well as in an IP54 protected outdoor version.

The IoT gateway from iesy is also based on the eNUC standard for the carrier board and housing. Under the hood, Qseven Computer-on-Modules are used. These come either with ARM or x68 technology. The entire range of current technologies is available, from modules featuring the particularly energy-efficient i.MX6 ARM processors, or the graphics-rich AMD Embedded G-Series APUs, to the latest Intel Atom processors. This allows OEMs to scale their gateway for the widest range of varying software, performance and cost requirements. The interface offer includes the standard industrial set comprising 4x serial UART interfaces, RS232, 2x TTL as well as 3x USB and 2x GbE, and is suited for the connection of existing, mostly wired installations.

The FlexGate gateway from EXPEMB is also based on Qseven modules, but with IoT connectivity that has been specially developed for the Low Power Wide Area (LPWA) protocol LoRa. It connects up to 62,500 smart LoRa sensors and devices, providing 1 Gbit Ethernet, WLAN, 3G/4G or Bluetooth for communication with the central cloud. All these connections are available at the same time on the gateway and if a connection fails, an individual fallback can be defined with different scripts. A wide range of I/Os for interfac-

ing with the field – such as 2x USB ports, 1x serial interface, GPIOs and Modbus fieldbus support – also allows the connection of additional local devices and networks for every requirement.

Machine and systems developers looking for an even more flexible gateway for their IoT sensor networks find the appropriate dedicated hardware platform in the congatec IoT gateway. It supports up to six modules for a wide variety of wireless interfaces – from LTE to WLAN, Bluetooth and ZigBee to LPWA networks such as Sigfox or LoRa – which makes it a particularly flexible solution for heterogeneous applications and enables the consolidation of multiple gateways in a single platform. If server performance and real-time communication are required for Industry 4.0 applications, smart industrial servers based on COM Express Type 7 and offering real-time communication can be implemented via 10 Gigabit Ethernet. Up to 4 GbE interfaces support redundant and therefore fault-tolerant communication for high-availability gateways, while up to 32 PCIe lanes provide the flexibility to connect any type of peripheral. As a result, OEMs already have a wide choice of IoT gateways for use with the new Cloud API. If this selection is not sufficient, they can call upon congatec Embedded Design and Manufacturing Services to produce application-ready designs. By extending the support from standardization initiatives, the Cloud API for IoT Gateways will in future also be supported by other manufacturers.

Since the source code is made available in C++, there is no investment risk even today. Machine, systems and automation providers should therefore evaluate whether they can use the Cloud API to connect their solutions to the cloud, thereby saving valuable time and many lines of code in the development of their specific solutions. ■

Product News

■ Neousys: ARM-based IoT, IIoT and automation gateway

Neousys Technology has launched the IGT-20, an industrial grade ARM-based gateway. Unlike System on Module that's commonly provided as a barebone component, IGT-20 is based on AM3352 from Texas Instrument's Sitara AM335x family and will be shipped as a ready system pre-installed with Debian. The industrial nature of IGT-20 means it is in compliance with common industrial certifications such as CE/FCC, shock and vibration.

News ID 5451

■ Ubiqconn acquires RuggON to expand global IIoT strategy

Ubiqconn announced the buy-out acquisition of RuggON shares, a leading supplier in rugged portable computing systems. The acquisition is considered as a step-forward to offer complete Mobile IIoT solutions and expand its global Industrial IoT market strategy in the ecosystem. This is also the first acquisition case of Ubiqconn since its establishment 5 years ago.

News ID 5436

■ TQ: QNX7 reliable operating system is on the rise

TQ is launching the new Version 7.0 of QNX with its TQMa6x embedded module based on ARM Cortex A9. A Version 7.0 of BSP will soon also be available for the two Cortex modules TQMa6ULx and TQMa7x. By implementing these BSPs, TQ is looking further into the future and is combining its innovative ARM products with a reliable and real-time capable operating system.

News ID 5454

■ SINTRONES: fanless in-vehicle computer for autonomous vehicle applications

SINTRONES introduce the new ABOX-5000G1 fanless In-Vehicle computer with dedicated graphics card. Combines the CUDA technology into IoT Connected Smart Cars & Vehicles application, ABOX-5000G1 can support deep learning A.I., virtual reality, and autonomous vehicles.

News ID 5559

■ ARBOR: COM Express Basic Type 6 module with 7th gen Intel Core processor

ARBOR released the ARBOR EmETXe-i90M0 COM Express Type 6 Module. Built on Intel's new 14nm process technology, the EmETXe-i90M0 is based on the Intel 7th Generation Core processors and supports the Intel Turbo Boost Technology. This increases the CPU processing speed to deliver breakthrough CPU performance, excellent graphic capability, as well as the enhancement in security and management functions.

News ID 5441

■ TME: Wi-Fi modules deliver highest possible level of security for data transmission

The ATWINC15x0 series Wi-Fi modules from Microchip are well suited for the IoT. These are network controllers working according to the IEEE802.11 b/g/n standard, transmitting data wirelessly in the 2.4GHz frequency band.

News ID 5442

■ Axiomtek: fanless Embedded system with patented mechanism design

Axiomtek is announcing the eBOX700-891-FL, a fanless embedded system powered by the 7th generation Intel Core i7/i5/i3 and Celeron processors with the Intel H110 chipset. It supports dual DDR4-2133 SO-DIMM slots with up to 32GB system memory. This embedded box PC comes with a user-friendly mechanism design and offers great flexibility, reliability, and scalability, well suited for vision inspection (USB/PoE), motion control, security surveillance and industrial automation.

News ID 5556

■ PICMG: 6th MicroTCA workshop to be held at DESY facility

PICMG is announcing the 6th MicroTCA Workshop to be held at the DESY campus in Hamburg, Germany from Dec 4-7th 2017. The conference-style workshop includes short presentations and tutorials on developments using the MicroTCA open standard architecture. Part of the workshop is dedicated for an industry exhibition and an interoperability session. Participants have the opportunity to learn about the latest applications of MicroTCA in research facilities, showcase new products and developments, and network with others in a friendly and collaborative atmosphere.

News ID 5606

■ Manhattan Skyline: Linux ready Cortex-A5 industrial box computer

Artila Electronics, which specializes in the development and manufacture of Linux-ready ARM embedded industrial computers, launches the highly integrated compact Box Computer, Matrix-710, based on ATMEL ATSAMA5D35 536MHz Cortex-A5 CPU, especially for industrial control, automation gateway, mobile gateway, smart energy application. The Matrix-710 supports node red user interface.

News ID 5467

■ Artesyn: server blade meeting long life cycle needs

Artesyn Embedded Technologies launched a powerful new packet processing server blade, the ATCA-7540, based on dual Intel Xeon Scalable processors. The ATCA-7540 provides a migration path and future-proof platform for defense applications in air/ship-borne data centers, ground control stations, network data analytics, ad-hoc mobile networks and other C4ISR tasks. The selected processor family combined with Artesyn's engineering and supply chain expertise pro-

vides a performance and longevity-of-supply improvement over existing server blades. Artesyn expects its selected processors to have a 15-year life cycle.
News ID 5474

Cincoze: compact and economic fanless Embedded computer

Cincoze has unveiled the new DA-1000 Series Fanless Embedded Computer, an ultra-compact volume fanless embedded computer based on Intel Atom E3826 platform; it has 1.46GHz and integrated HD graphics processor. This can bring economic advantages on budget and also fulfills the needs for industrial computing tasks.
News ID 5534

MicroSys: SBC family supports NXP QorIQ LS1023A/43A/46A/88A CPUs

The miriac SBCs based on NXP QorIQ LS1023A/43A/46A/88A CPUs offer a complete family of single board computers and development kits, that fit rapid prototyping demand or even serial production use. This is a perfect means to create a wide spectrum of flexible/high performance/low power applications with compatible SoMs on the same form factor.
News ID 5477

EKF: dual M.2 PCIe/NVMe SSD carrier board

EKF presents the SE2-MOOD, a powerful mass storage solution for CompactPCI Serial systems. The board is equipped with three M.2 sockets for SSD modules. Two M.2 sockets are suitable for NVMe type SSDs, while the third M.2 connector can accommodate a classic M.2 SATA style module.
News ID 5598

Kontron adds removeable SSD option to COBALT system

Kontron has enhanced its next-generation COBALT system with a removeable solid state drive (RSSD) bay option. Giving designers maximum flexibility to select and configure the right amount of storage capacity as an ordering option without modifying the system, COBALT supports up to two RSSDs via a front removable drive bay.
News ID 5595

TQ: rugged embedded module with latest Intel Apollo Lake processor

The new COM Express TQMxE39C1 compact module from the embedded specialist TQ is available with the latest generation of Intel Atom processors, and it offers attractive technical properties optimized for harsh and rugged applications. The combination of the soldered 4/8GB Dual Channel DDR3L storage, ECC, an extended temperature range specification, optimized cooling solutions and optional conformal coating open up new potential applications for the module in extreme environmental conditions.
News ID 5480

Avalue: latest products for smart retail solution at RetailNOW 2017

Avalue Technology will be joining RetailNOW 2017 at Las Vegas. In this event, Avalue showcases latest products for smart retail solution. Avalue will present omnichannel retail solutions include modules such as Facial recognition, Digital Menu Boards, Instant Inventory-Checking, POS transaction and Business Intelligence.
News ID 5489

F&S Elektronik Systeme: start your development in less than an hour

Start your development in less than one hour with Fedora 23, a VirtualBox Appliance. VirtualBox is a high-performance product for enterprise customers, it is also the only professional solution that is freely available as Open Source Software under the terms of the GNU General Public License version 2.
News ID 5561

IBASE: expandable modular fanless systems for smart factory automation applications

IBASE unveils its latest AMI220 expandable modular fanless systems supporting the 7th/6th generation Intel Core i7/i5/i3 desktop processors designed for industrial-grade solutions in smart factory automation and retail applications.
News ID 5478

Lanner: physical security with fanless Embedded PC

Enhanced security operations such as physical security and surveillance analytics are required by almost all industries. Such security measures provide real-time intelligence for live HD video detection of security events and are instrumental not only in safeguarding business intelligence but also in facilitating efficient workforce management and optimizing operational decisions.
News ID 5512

Acceed: energy-saving gateway to IIoT offers a variety of wireless interfaces

Connectivity is trumps in the Industrial Internet of Things. Energy-efficiency and cost efficiency denote further significant factors. The new IoT Gateway Matrix MXE-110i, offered by Acceed, is precisely tailored to meet these requirements. Based on the Quark SoC X1021 from Intel, the processor optimised for energy-saving applications, the industry gateway integrates the Wind River Intelligent Device Platform XT 3.1.
News ID 5462

Hardware for Industrial IoT fog and mist computing

By JC Ramirez, ADL Embedded Solutions

The latest industrial Intel Atom processors are empowering new, small form factor systems for industrial applications. IIoT hardware optimization using a bottom-up approach gathers momentum and the ecosystem of providers of fog and mist-computing solutions gets new hardware.

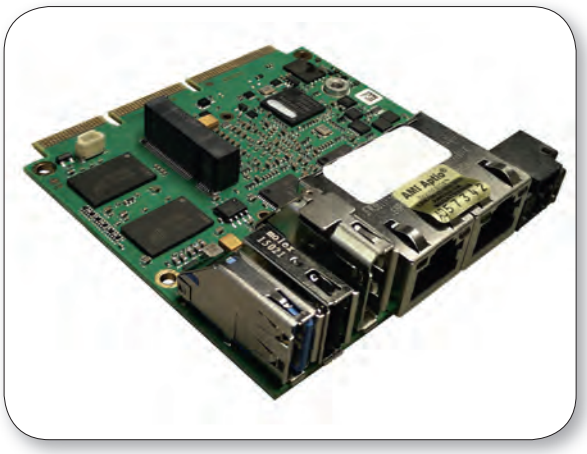

Figure 1. With the ADLE-3800SEC a Microsoft Azure certified 75 mm x 75 mm Edge Connect SBC with Intel E3800 ATOM processor is offered.

■ Industrial IoT (IIoT) continues to expand into the far reaches of the industrial and commercial environment. In many of these environments (think smart grid, wind farms, oil and gas, autonomous vehicles, etc) reliable connectivity to the cloud is plagued by intermittent connectivity, latency and security issues. Add to that the fragmented reality of trying to build a cohesive IIoT cloud solution from the vast array of legacy and modern equipment, machinery, control software, and disparate databases, and the task begins to take on monumental costs and time proportions. To address some of these issues, recent attention has turned to pushing IIoT hardware, data storage, data analytics and communication resources nearer to the IIoT edge in close proximity to the things being controlled. First and foremost, this helps address intermittent connectivity and latency issues resulting in better uptimes and overall efficiency, but it also provides more optimal distribution of resources and helps limit the scope of the security task.

Social media conversation and many recent articles have centered on these new IoT/IIoT computing strategies. Extending the analogy of the IoT/IIoT cloud in the meteorological sense, this idea of moving IIoT resources closer to the things being controlled is often referred to as fog or mist computing. If fog computing defines IIoT resources in close proximity to things, mist computing defines IIoT resources directly on or in things. Promoted by the Open Fog Consortium with founding members including Intel, ARM, Cisco, and Dell, fog computing is defined as, "...a system-level horizontal architecture that distributes resources and services of computing, storage, control and networking anywhere along the continuum from cloud to things." Fog computing addresses the needs of IIoT at a local level providing distributed data and control resources for increased efficiency and reliability. Fog computing makes use of new software-designed automation elements like software-PLC controllers and digitization of equipment and processes with sufficient detail as to be termed, digital twins. These virtual and digitization strategies are a key component in addressing the fragmented state of communication and control at the lowest hardware levels.

Extending this analogy one step further, the term mist computing is used to refer to those compute, communication, and storage elements integrated directly into or onto machinery and equipment thus extending IIoT computing to the hardware level. According to industry expert Angelo Corsaro, Ph.D. one of the primary objectives for mist computing is "...enabling resource harvesting by exploiting the computation, storage, and communication capabilities available on the things." Table 1 lists the typical hardware necessary at the various IIoT computing layers. At the cloud level, the hardware elements revolve around server farms, immense in some cases, and sophisticated enterprise-scale control centers designed to store and analyze truly massive amounts of data for management, control, and monitoring of the enterprise down to the factory floor. At the fog computing level, the scale of the equipment takes on smaller proportions via server rooms and local storage supported by an array of smaller networking elements including gateways, routers, and industrial PCs with local databases enabling local data analytics, monitoring and control of things. Mist computing completes the resource migration picture by extending key hardware elements of fog computing directly onto or into things albeit in much smaller embedded form factors. Beyond providing the equipment control and monitoring function, this hardware must also support fog and mist computing sharing of resources.

The reality of close proximity or direct physical integration onto/into things is no small feat. From an environmental standpoint, the hardware must be able to survive the same environmental conditions (temperature, humidity, mechanical stress, etc) as the things

IIoT Layers	Hardware Resources
Cloud	Remote server farms and control centers for data analytics, monitoring and control.
Fog	Local computing hardware for data storage, analytics and networking
Mist	Embedded systems and hardware on or in "things"

Table 1. Hardware requirements according to Industrial IoT (IIoT) layers.

Figure 2. Microsoft Azure certified, ADLEPC-1500 embedded PC.

into which it is integrated. Increasingly, these things are in exposed or remote locations making the choice of mist computing hardware a critical design element. As well, the product lifetime and quality of mist computing hardware cannot degrade in any way the overall quality and product lifetime of the machinery or equipment which it is controlling. From a vendor standpoint, this translates into a careful selection of hardware BOM components that optimizes product lifetime and quality. As well, the circuit architecture must be such that operation over all temperatures and voltage conditions is guaranteed - all while maintaining a compact form factor suitable for embedded integration.

From a functional standpoint, fog and mist computing hardware must support multiple cores with virtualization technology to support software-defined automation and digitization requirements. This hardware must also provide the necessary performance for on-machine data analytics, control, monitoring and communication with other elements of the mist or fog computing network. Addressing many of these needs are new, small form factor embedded CPUs and system offerings from companies like ADL Embedded Solutions and others, which are bringing full-featured compact CPUs and industrial embedded PC designs to market.

A good illustration of this is new ADLE3800SEC designed with the latest industrial Intel Atom processors with extended junction temperatures of -40 °C to 110 °C. This compact (75mm x 75mm) edge-connected SBC is a full-featured, standalone SBC for rugged, embedded applications. The **edge-connect architecture** allows for added I/O expansion and connectors in a variety of baseboard/breakout board configurations (flat, vertical, odd-shapes, etc) for rugged, portable/mobile applications such as unmanned systems, robotics, remote data logging, wearable computing or portable medical devices. The ADLE3800SEC is suited for rugged, extended temperature intelligent systems with stringent size, weight, and power (SWAP) requirements. It boasts a wide input voltage (20-30VDC), DisplayPort, USB2.0, USB3.0, and two GLAN ports with support for DirectX 11, Open GL 4.0, and full HD video playback. The SBC is capable of standalone operation or easy integration with expansion I/O boards, which helps provide a single computing board across equipment and product profiles for consistency of hardware, firmware and BIOS.

Compact solutions like the ADLE3800SEC or the derivative mini ADLEPC-1500 also ease the task of IIoT deployment by maintaining compatibility with IoT development platforms like Microsoft Azure and others to help optimize security and overall stability. Their substantial functionality and performance at generally lower cost helps reduce the cost of fog and mist fabric creation - necessary for efficient distribution of data storage and data analytics for fog and mist communication, monitoring, and control.

The ADLEPC-1500 is a full-featured embedded PC with dimensions of 86mm x 81mm x 33mm (W x D x H). It is based on the compact ADLE3800SEC SBC and is characterized by a wide input voltage range of 20 to 30 VDC (optionally up to 36 VDC) as well as a large temperature range of -40°C to + 85°C. This makes it a solution for a variety of applications and environments, such as unmanned systems (UAV), industrial controls, robotics, traffic management and monitoring.

The embedded PC is housed in an industrial CE/FCC-compliant housing with mounting options for DIN Rail, VESA and direct mounting. The SBC EdgeConnect architecture allows the embedded PC to be easily extended by additional interfaces and functions according to customer-specific requirements. This makes it possible, for example, to use customer-specific expansion cards over several generations of processors without requiring a lot of redesign or development. Significant savings and less risk in development and design are immediate advantages. As this bottom-up approach to IIoT hardware optimization continues to gain momentum, and the ecosystem of hardware vendors providing fog and mist computing solutions grows, we can expect to take a giant step forward in the near future toward making the promise of IIoT a reality. ■

Developments in control electronics enable intelligent vending machines

By Fabrizio Petris, Omron Electronic Components Europe

This article reviews sensors for customer identification, presence detection and reliable note recognition in the mechanisms of intelligent vending machines, and also discusses remote reset switches.

Figure 1. HVC builds on the Omron OKAO vision software, a proven set of image recognition algorithms used in over 500 million digital cameras, mobile phones and surveillance robots around the world.

Vending machines are a relatively unrecognised, but fast growing, market opportunity for the electronics industry. This growth is being driven by a new class of unit: the intelligent vending machine, which marries the convenience and accessibility of instant, on the spot transaction fulfilment with the tailored, entertaining and connected retail experience that customers now expect. According to a March 2017 report from Grand View Research, this market is expected to reach $11.84 billion by 2025. Each and every one of these machines will encompass electronic systems to facilitate the interaction with the user, to control product and cash dispensing and to manage energy use. What solutions are available to create this new breed of intelligent vending machines?

Essentially, this new breed of intelligent vending machines offers a purchasing experience that is personal and individual for each user. The machines themselves can be tailored to the application, in terms of colour, size, space and dispensing rate, which is essential as roll-outs can be quite small. They also embrace fully the Internet of Things paradigm, and are fully connected offering cloud-based server support, scanning tools, and value-added services based on web-based interaction. Vendors can use the Internet to update content for their interactive platforms and present custom advertising. What are these new vending machines selling? Whilst the range of goods on offer is huge, food and beverages is one of the largest markets: especially hot drinks. Research and Markets found that the hot drinks segment dominated the industry, accounting for more than 62% of the overall volume due to the surging demand for refreshment drinks. Many of these machines are located in offices, as they facilitate employees grabbing a quick snack in between breaks without the need of placing an order and waiting for it to be processed.

The barista in your favourite coffee shop will quite naturally greet a business executive, an elderly lady and a teenager very differently. The more engaged staff will try and tempt the customer with a croissant, a cake or a healthy snack depending on their experience of what this kind of customer or even this individual customer normally buys. Vending machine manufacturers recognise that this interaction is an essential part of the experience, and can even be monetised. For example, their market research may show that a specific snack appeals strongly to customers aged 20-25 – so a tailored offer to these customers might have an impact. A quite different offer might appeal to the sixty-plus age group. So how can a vending machine emulate something that a human does quite easily and naturally? Fitting vending machines with a camera is straightforward and inexpensive, but the challenge is interpreting what it sees. Fortunately, consumer electronics is already providing a solution. Phones can recognise their owners face, and vending machines can make use of the same algorithms and technology. Implementing them is a challenge though – vending machines are produced in tiny volumes compared to phones, and have a very different architecture. The success of the design depends critically on the use of good algorithms that deliver a reliable result without using excessive system resources. Even well-designed algorithms will be processor and memory intensive, and adding vision will demand additional system resource.

The Omron HVC module (figure 1) is aimed at such applications, available in low volumes and readily integrated by any designer without any need to understand the complex algorithms needed to analyse the image or the optical design. HVC builds on the

Figure 2. The B5W light convergent reflective sensor detects target objects even those that are often a challenge such as reflective, transparent, diffuse or black surfaces.

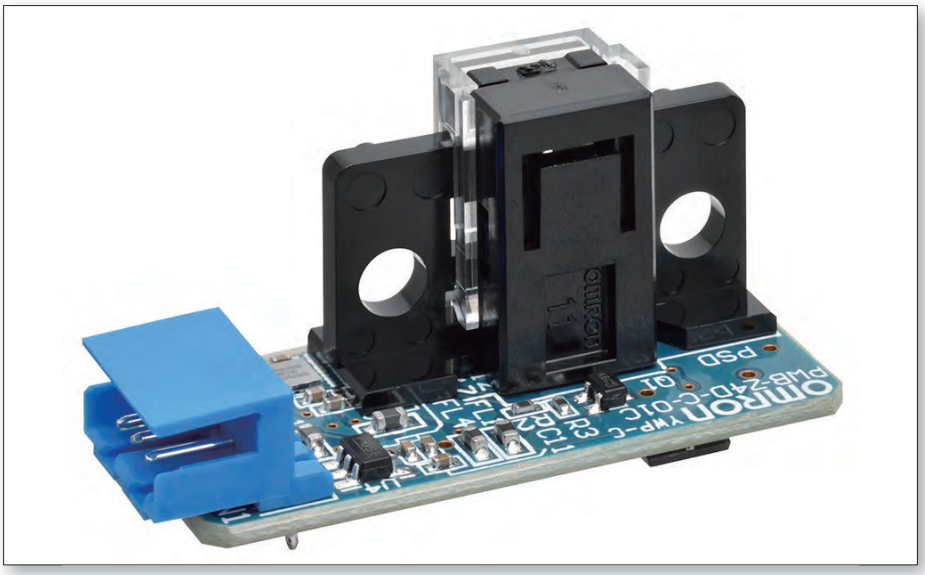

Figure 3. The Z4D micro-displacement sensor is capable of resolving just 10 microns.

Omron OKAO vision software, a proven set of image recognition algorithms used in over 500 million digital cameras, mobile phones and surveillance robots around the world. Key features of the module include speed and consistency of response, and the distance over which it can take readings. For example, HVC can capture, detect and recognise a face and provide information like age, gender and mood over a distance of 1.3m in 1.1s and will provide a confidence level with its reading. HVC implements the OKAO software on a hardware platform complete with camera, processor and data interface optimised specifically in terms of its digital and optical design for this application. The module is a fully integrated, plug-in solution. The developer can just look at the outputs and configure the system to make appropriate decisions depending on their status. Intelligent vending machines offer an even wider range of goods, and need to adapt quickly to changing retail needs. Drinks vending machines offer a particular challenge, as they need to detect the presence and level of different liquids, some of which may be entirely clear, and the presence or absence of cups, which again could be clear plastic. The fact that these liquids may be hot and pose a safety hazard increases the importance machine manufacturers attach to accurate and reliable detection.

Although conventional photo micro sensors (PMS) are often suitable, it is well known that they struggle with many types of surface. Transparent objects and liquids have always been hard to detect, as have mirrored, diffuse and deep black surfaces. The new Omron B5W Light Convergent Reflective Sensor (figure 2) detects target objects much more reliably than general reflection photo sensors, even those that are often a challenge such as reflective, transparent, diffuse or black surfaces. The sensor convergent light beam can be accurately set to trigger on the presence of an object within a tightly specified target area, and ignore any objects in the background or foreground. These sensors are equally suitable for contactless detection of clear or coloured liquids in transparent tanks. The B5W features a combination of a cylindrical and a non-spherical lens.

Despite the increasing popularity of contactless payment, many customers still like to present cash. Inflation means that increasingly, machines need to accept notes and to return them in change. The latest high-resolution micro displacement sensors can greatly increase the reliability of these mechanisms, offering contactless measurement of the thickness of paper and multi-feed detection through minute changes in the location of light reflected from the object.

For example, the new Z4D micro-displacement sensor (figure 3) from Omron is capable of resolving just 10 microns – one tenth the diameter of a human hair or the thickness of a coat of paint. The exceptional resolution is based on a proprietary optical design using the triangulation. This structure achieves very good and stable linearity between the output voltage and distance, simplifying the design of the host circuit. Like other electronic systems, intelligent vending machines are subject to power control directives, like the EU ErP Ecodesign Directive which specifies that the power consumption of equipment in standby mode should not exceed 0.50W, unless the equipment has a status display in which case 1W is permissible. This issue applies particularly to tabletop vending machines such as coffee machines issued to offices, which are used less intensively and can be left to switch off when not in use, overnight for example.

To support this requirement, Omron has introduced the industry-smallest remote-reset rocker switch supporting zero-standby power design. This switch can be controlled remotely and is offered in a version with a delayed-off feature to support safe system shut-down. With this switch, the power to the system is maintained when the switch is returned to the off position. The system is then powered down by an external signal after an interval determined by the designer. This prevents issues with data loss or circuit damage through forced power-off by the user, and can help safer application design. ■

Basics and tools for multi-core debugging

By Jens Braunes, PLS

In the past, debugging meant seeking for variables written with wrong values. These days, it's completely different: for the multi-core systems used nowadays in automotive control units, debugging means managing deadlocks, resource conflicts or timing issues of real-time applications.

The paradigm shift and the dramatic increase of complexity represent a big challenge for silicon vendors as well as for tool providers. And they can only master it together. The reason for this is because on-chip debug functions integrated by silicon vendors get fully effective only with powerful software tools which are able to completely utilize them and open a door for the developers for efficient use. If we look at the consumer market, multi-core systems have become mainstream since more than 10 years. But in deeply embedded systems, like motor control, the technology shift towards multi-core took place only in recent years and that often faint-heartedly. One reason is certainly the high demands on safety, reliability and real-time, and this has for sure the highest priority in the whole area of automotive applications. Another one is due to the existing huge portfolio of reinforced and well tested software modules for single-core systems whose porting to multiple heterogeneous cores would require a significant effort.

If we look at the world of PCs or consumer electronics dominated by Windows, Linux or Android operating systems then the CPUs used are based on homogeneous multi-core architectures. Identical cores with identical instruction sets, performance and interconnect to the other on-chip units allow executing any OS task or process by any core. Task creation and core allocation take place dynamically at run-time in order to balance the load and optimize the run-time behavior.

In the world of automotive control applications the multi-core approach is completely different. In general, tasks have dedicated processing times and slots, and must guarantee response within a specific time limit. And the tasks are heterogeneous. They have many different demands on performance, communication resources and instruction set features. For this reason, mostly heterogeneous multi-core architectures with several different cores, tailored to the needs of specific tasks are used.

One example of such a microcontroller is the AURIX from Infineon. This is a complete device family of multi-core controllers that are widely used in engine control units nowadays. Although the main cores all come from the TriCore architecture family, they differ in details. In some AURIX devices different flavors of the core architecture are implemented, e.g. performance cores (P-cores) and economy cores (E-cores). Some of the cores feature additional lockstep cores, enabling them to fulfill higher safety requirements stipulated by ISO26262, for example. The lockstep cores are based on the same core architecture and execute the same code. The results of both the actual computational core and the lockstep core are compared to each other and the reliability of the code execution and calculations checked permanently. If a deviation arises, the whole system has to be reset into a save state.

Optimized algorithms for advanced timing control, as needed for PWMs for electrical and hybrid drives, or for complex signal processing are supported by an additional core of AURIX, namely the GTM (Generic Timer Module), an intellectual property (IP) from Bosch. The GTM is completely different from the other TriCore-based cores. It has a lot of units dedicated for signal generation and processing as well as a number of processing units which can be programmed in a RISC-like manner.

The tasks executed by GTM are executed loosely coupled to the other TriCore tasks but can communicate using a kind of shared memory. It is quite obvious that the task allocation to the different cores is not only a question of load balancing. It is rather a question of which core is the most appropriate one for executing the task. That decision can hardly be made by an operation system during run-time. As a consequence, it has to be determined already during the design phase of the software which core will take over which task.

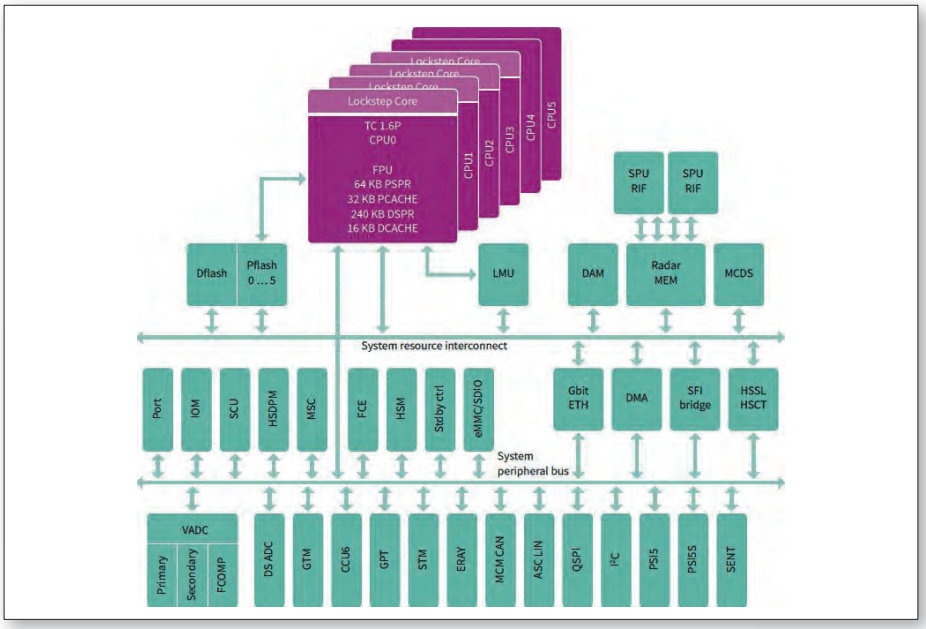

Figure 1. AURIX multi-core architecture (source: Infineon)

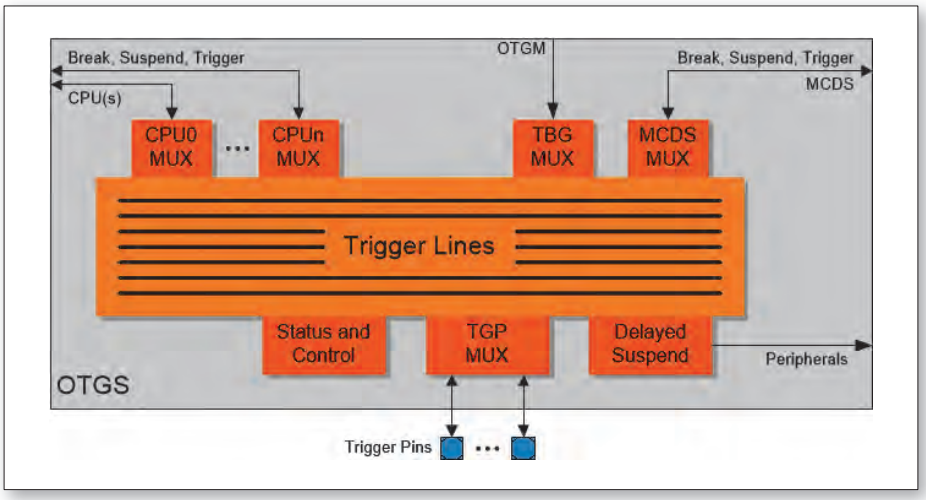

Figure 2. OCDS trigger switch of Infineon AURIX

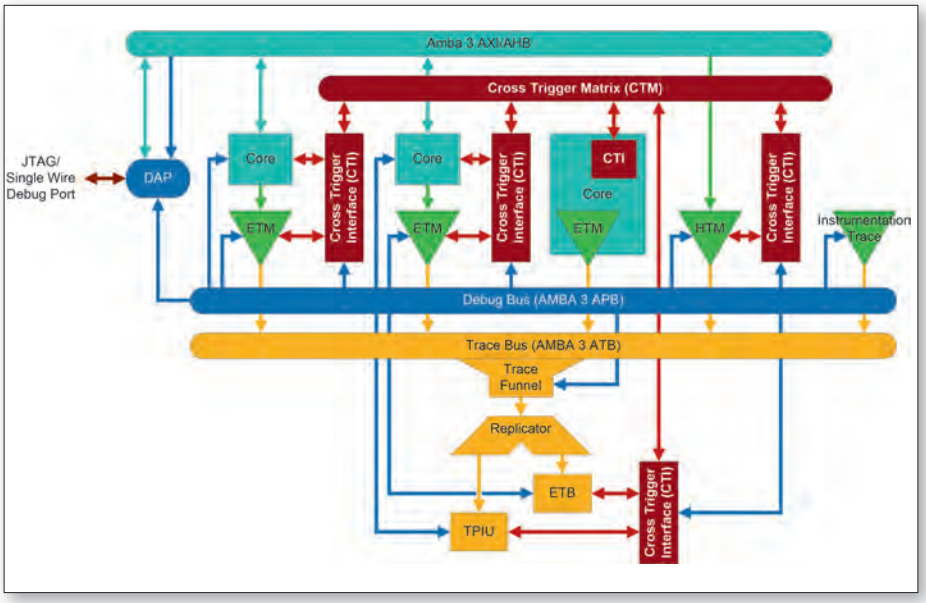

Figure 3. ARM CoreSight debug and trace infrastructure with cross-triggering

Those applications which are executing distributed across several cores and have to cope with high real-time demands are often the most challenging for debugging, test and system analysis. The typically existing large dependencies between the tasks running on different cores have a considerable influence on run-mode debugging or also known as stop-go debugging. It might be quite dangerous to break a single core while the others are kept running. In the worst case, the whole application would end up in chaos or crashes. Sometimes the other cores and also the peripherals have to be halted as well in order that the application does not get into an undefined state. The point is that heterogeneous cores with different clocking and execution pipelines do not allow a real synchronous stop. In practice, we will always have a delay. There is a complete opposite case; if for instance another, completely independent application is running in parallel on the same processor but using different cores, then it might be dangerous to halt the complete multi-core system. These scenarios show the importance of a flexible, synchronous run-control in a multi-core debug infrastructure.

A second, not less important aspect is the analysis of the run-time behavior without influencing it at the same time. This non-intrusive system observation plays an important role not only for real-time critical applications but also for profiling tasks or monitoring communication between cores. Often it is desirable to read out the system state from the target by means of the debugger at a certain point in time. However, if we halt the application for that purpose the system behavior would be fundamentally changed and has nothing to do anymore with the behavior of the application running later without an attached debugger. As a consequence, for an efficient non-intrusive system observation trace is indispensable.

Before we take a deeper look into trace features we will first come back to aspects dealing with synchronous run-control. Synchronous run-control necessarily requires short signal paths between the cores which can only be realized by on-chip debug hardware. Signaling of stop and go requests from the outside, for example from the debug probe via the debug interface, takes too much time, in particular for the high clock rates we have nowadays. And once the complete system is stopped finally the states of the individual tasks have lost their coherence completely.

All silicon vendors provide their own on-chip debug solution. There is no real standard at all in that area. Infineon for example is calling its solution OCDS (on-chip debug support). The central component of OCDS for run-control is a trigger switch, which propagates halt and

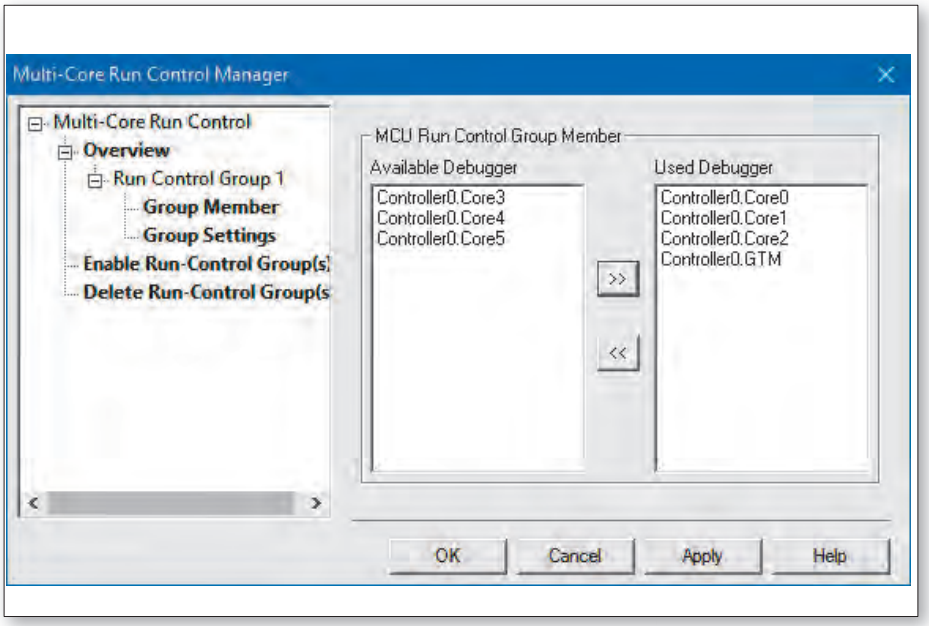

Figure 4. Multi-core run-control management of UDE

suspend signals via so-called trigger lines to all cores and also to peripherals. The trigger switch is configurable that individual cores as well as peripherals can be stopped and stated again at the same time and without having an effect on the others. In addition to that, the trigger lines can be connected to pins and make them available to the outside world. This offers interesting opportunities. For example, signals can be connected to an oscilloscope or a break can be triggered externally.

Of course, besides the AURIX, a number of other microcontroller architectures exist, which are used for automotive applications. Two other examples are the SoCs based on the ARM Cortex-R architecture and the PowerArchitecture based SPC5 from STMicroelectronics. Both bring along an own implementation of on-chip run-control support. On the ARM side, it is called CoreSight. Let's have a look at this.

In CoreSight a so called cross-trigger matrix (CTM) is used in order to propagate break and go signals across the cores. The cores themselves can trigger such signals and respond to them but not directly. A cross-trigger interface (CTI) attached to each core takes care of it. Up to four channels in a CTM broadcast the signals to all attached CTIs. The CTIs can be configured that way, for either passing the run-control signals to the core or blocking them. Thus, simply a core gets halted along with others or not. Because of hand-shake mechanisms, which are necessary between different components, there is a little delay of several clock cycles. The actual amount of that delay highly depends on the implementation. In fact, avoiding it is technically not possible. One drawback of the ARM solution is that CoreSight is in fact a set of components and IP blocks from which silicon vendors can choose. As a consequence, debug tool vendors cannot rely on the existence of CTMs and CTIs in a particular multi-core SoC.

As expected, the PowerArchitecture based controllers of the SPC5 family support synchronous run-control by means of hardware. The unit in charge is called DCI (Debug and Calibration Interface). The advantage compared to the CoreSight is that, as we already know from the trigger- switch of AURIX, peripherals are also connected to the debug signals. That allows halting the complete system, not only the cores.

In real life developers don't want to take care of all these details. For this reason multi-core debuggers like the Universal Debug Engine® (UDE) from PLS make the complex configuration of on-chip debug units transparent to the users. The integrated run-control management, for example, easily allows creating run-control groups containing all the cores which should be stopped and started synchronously.

Especially when it comes to debugging and system analysis of real-time applications, on-chip trace is mandatory and is available for almost all high-end microcontrollers like the AURIX or SPC5. STMicroelectronics for example implements Nexus class 3 for tracing, for Infineon microcontrollers the on-chip trace is called MCDS (Multi-Core-Debug Solution) and for ARM trace hardware blocks come from the already known CoreSight. They all have in common that they are able to capture trace data from different cores in parallel. Timestamps allow a time correlation between the data of the different trace sources and thus we can reconstruct the exact sequence of events. This allows us to detect deadlocks and race conditions and communication bottlenecks can be found too.

Now, the most challenging task is transferring the captured trace data off-chip in order to analyze them by the debugger. From the current trace systems we know two ways to do so. Either the trace data is buffered in an on-chip trace memory and transferred via the standard debug interface, or a high bandwidth trace interface exists. The first allows a much higher bandwidth between the trace sources (CPUs, busses) and the trace sink, namely the on-chip trace memory. The major drawback is the very limited capacity. The later allows a theoretically unlimited observation period, but the bandwidth is in fact the limiting parameter. For both cases clever filter and trigger mechanisms as part of the trace solutions can help. These allow qualifying the captured trace data while they are created in order to record only the really necessary data. With it cross-triggering is also possible. Cross-triggering allows, for example, starting the trace recording for one core if a specific event arises at another core. That function is helpful for debugging of inter-core communication.

Experience has shown that for an effective use of trace the user needs comprehensive support by debug tools. That is true not only for the analysis of the recorded data but also for the definition of trace tasks and the configuration of the filters and triggers. UDE, for example, even provides a graphical tool for that purpose which allows managing even complex cross-triggers easily. Several tools help to analyze the recorded trace: from visualization of parallel execution of cores, via profiling, to providing code coverage information. ■

Product News

■ **Green Hills: INTEGRITY-178 tuMP selected by flight critical system supplier**

Green Hills Software has been selected by a US supplier of guidance and navigation equipment for commercial and military aircraft to provide its DO-178B Level A-compliant real-time multicore operating system for their next generation of equipment based on the Xilinx Zynq Ultrascale+ MPSoC. The Ultrascale+ MPSoC includes four Cortex-A53 64-bit cores which will run Green Hills Software's INTEGRITY-178 Time-Variant Unified Multi Processing operating system.

News ID 5468

How to leverage automotive software development standards to mitigate risk

By Arthur Hicken, Parasoft

This article discusses some of the issues contributing to automotive software complexity, as well as the risks associated with automotive software development. We'll also discuss how implementing known development best practices, such as ISO 26262, helps organizations mitigate those risks.

When average non-engineer consumers think of electronic systems in automobiles, they likely think of integrated GPS, infotainment systems, and probably some vague notion that there is a computer somewhere in the car controlling some of the safety features. Of course, the reality is that modern cars are significantly more complex with software playing an increasingly larger role in all facets of functionality, including many safety-critical functions. In fact, cars have been leveraging electronic systems for critical functionality for decades, and market changes, such as the push toward an Internet of Things, have nudged automakers towards embedding a greater number of complex computer systems that run the gamut of criticality.

The business structures and supply chains associated with system development further adds to the complexity. It's rare, if it happens at all, that a manufacturer engineers and builds every component and subsystem in their cars from the ground up, leading to potential integration issues. A transmission is taken from this model, a good braking system from that one. While they may have worked well in their previous environment, in a totally new complex system they may well have unintended and unexpected results. As a result, automotive software is often a complex hodgepodge of systems that may or may not have been sufficiently tested. Implementing components in an ad-hoc manner without proper testing, especially in safety-critical applications, can be extremely costly.

The upside, though, is that there are known practices for helping automakers mitigate the risk of failure by building software quality into their development processes. According to some estimates, a standard mid-range car can have well over a hundred electronic control units (ECU) processing millions of lines of code - and this number is increasing. It's not uncommon for a manufacturer to have several models of cars with over one hundred million lines of code. There is a perception that the more expensive the car, the more software is embedded - and that most of the software is dedicated to high-end infotainment components. While it's true that these systems become increasing complex as you move up the model line, even introductory lines of cars use software to control steering, brake systems, electrical power distribution, and so on. And even seemingly minor shifts in features, such as Bluetooth, climate control, cruise control, etc, lead to exponential growth of code.

We can assume that more code translates to more complexity - and therefore risk, but the impact may not necessarily be significant. A larger contributor to business risk associated with automotive software is the integration of code developed from a variety of sources across multiple tiers. Most components, including ECU-based components, are subcontracted to second-tier providers who subcontract to third-tier providers and so on. Each preceding tier has specific requirements associated with the component they're developing. Organizations often (but not always) have practices in place for analyzing incoming code to ensure that the components function as expected.

But this assumes that every component along the supply chain is a new development. In reality, downstream tiers are branching off code written for a specific make, model, and year. The mutation and reuse of code takes place throughout the supply chain, which leads to a testing problem. How does the manufacturer implement end-to-end testing in such a chaotic ecosystem of software development? When the ECU in the steering wheel was originally developed for one vehicle and the ECU in the dashboard was developed for another vehicle, and neither ECU was designed for the vehicle they are currently embedded in, what's the impact? How can you ensure that the complete system functions as expected? It is entirely possible for both systems to pass testing as functional but be unable to communicate properly in all situations. What is the risk

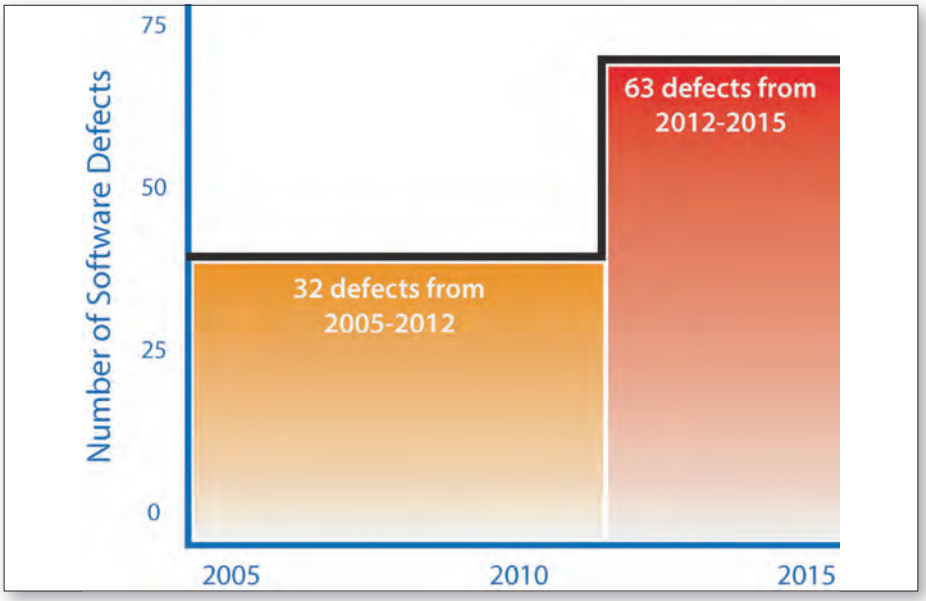

Figure 1. The amount of software defects has doubled in the last years, and NHTSA estimates that recalls and fixes cost automakers $3 billion per year.

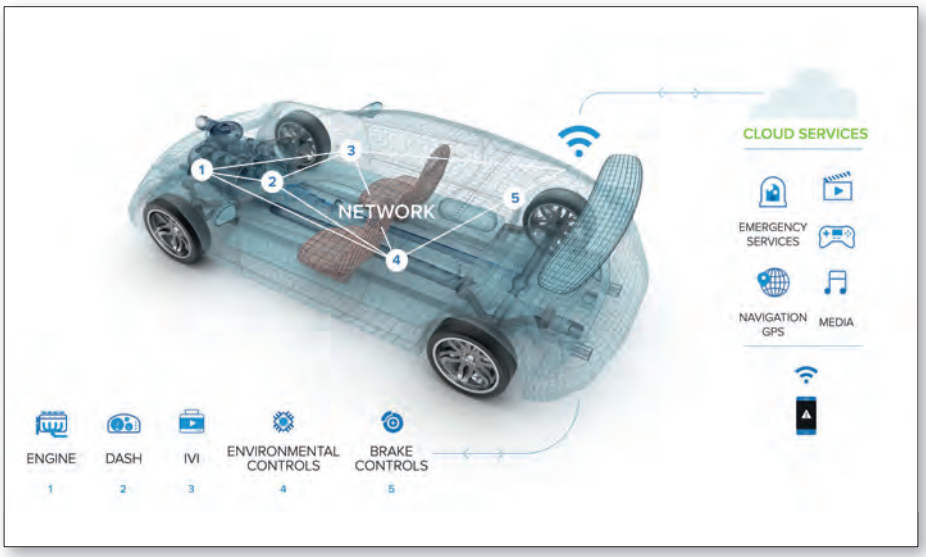

Figure 2. In modern cars, numerous complex computer systems are installed, with well over a hundred ECUs processing millions of lines of code.

associated with this gap? When organizations attempt to measure the cost of software development, they tend to look at general metrics: development time for the engineers; testing time for QA; building materials in the form of acquiring tool licenses, compilers, and other infrastructure components. These are important metrics, but often overlooked are the costs of failure. If the software in the braking system fails, what will it cost the business in terms of rework, recalls, audits, litigation, and loss of stock value? What if there is a loss of life?

We argue that the cost of quality is the cost of developing and testing the software, including all the normal metrics we identified plus the very tangible costs associated with a failure in the field. Defects cost automakers a lot of money. The NHTSA estimates that recalls and fixes across the industry cost automakers $3 billion annually. When it comes to the cost of software-related issues, a 2005 estimate from IEEE put the cost to manufacturers at $350 per car. When you consider the low profit margins across a line of vehicles, it's conceivable that a serious enough software defect can severely hurt the business.

The bottom line is important, but even more important is that people can become seriously injured or even die as a result of a software defect. And it doesn't matter how far down the supply chain the defect may originate, defects and all their associated consequences become the responsibility of the automaker. As such, any cost analysis around software development needs to take the potential costs of failure into consideration. We've argued that the complexity of the tiered supply chain for automotive software contributes to the overall risk associated with safety-critical systems. We've also reiterated the potential costs to automotive businesses. But there's another dimension to this issue that reside in the cultural difference between engineering and software development. Software development is almost never engineering. That is, certain concepts from engineering principles, such as repeatability, well-exercised best practices, and reliance on building standards have yet to become firmly established in software development. Additionally, training for software developers can be inconsistent - even non-existent - and organizations would have to go through great lengths to verify that their developers possess adequate knowledge to build safety-critical software.

This is in contrast to engineering in which the attitudes, mindsets, and history of the discipline enforce a process that is less prone to defects when compared to software development. That is not to say that engineers know what they're doing and software developers don't. Rather, it's to say that automotive engineering as a field is twice as mature as software development, and that the intangible, temporal nature of software perpetuates a cavalier attitude in which if it works, then it's done.

The emphasis in software development is around faster delivery and functional requirements - how quickly can we have this functionality? There is little incentive from management to implement sound engineering practices into the software development lifecycle. Achieving functional safety in software requires operationalizing certain engineering principles: functional safety must be proactive, processes must be controlled, measured, and repeatable, defects should be prevented through the implementation of standards, testing must be effective, deterministic, and should be done for complex memory problems.

The good news is that the attitudes around software development have been evolving. ISO 26262, MISRA, and other standards seek to normalize software development for automotive applications by providing a foundation for implementing engineering concepts in software development processes. Some organizations view compliance with ISO 26262 and other standards as an overhead-boosting burden without any direct value, but the truth is that the cost of failure associated with software defects is much, much greater than the cost of ensuring quality. As in electrical standards that specify a specific gauge of wire to carry a known voltage, coding standards can provide the guidelines that help avoid disaster. ■

Secure embedded software – choosing the right coding standard

By Richard Bellairs, PRQA

This article compares state-of-the-art coding standards and explains how adherence to them can help developers deliver more secure C and C++ code.

An increasing number of products that touch our daily lives are connected to the internet. This brings many benefits, but also introduces potential security vulnerabilities. It is imperative that the software powering these products is developed with security in mind. Adoption of a strong coding standard that addresses known security issues has been shown to deliver more secure products. Enforcing this standard with automated code analysis tools will help to ensure products are delivered on time and in budget.

The pace of change in consumer products is amazing and the rate of innovation continues to accelerate. A new generation of connected devices and socially oriented services continues to impact our lives in profound ways, from the use of voice-activated speakers to control our smart homes to the hundreds of sensors that are used to control traffic in our cities more effectively. The widespread adoption of connected devices raises concerns over their security and our privacy.

Security of software is a hot topic, and one that every organization must address effectively. C remains the dominant language for embedded software development in consumer products, with C++ growing in popularity. There is no shortcut to achieving software security; reducing the risk it poses requires a concerted effort, and an appreciation of best practice industry guidelines. Applying coding standards to the development of safety-critical software is a widely adopted practice, but coding standards that target security issues are still relatively new. Demand for software security standards has increased as a result of the Internet of Things (IoT); the security of data and the connections between devices have been shown to have serious security flaws. Some examples of high-profile failures include the hacking of TrendNet nanny cams and the failure of Nest thermostats due to a flawed software update. Security and privacy breaches not only put users at risk, but also have the potential to cause significant damage to company reputation. As such, security is a commercial imperative.

Recognition of the importance of security has increased over recent years. New security-focused coding standards have emerged alongside the more mature safety-critical standards. Although the underlying goals are different, their recommendations frequently overlap. Most of the coding standards considered in this article use rules to prohibit aspects of a language that are considered inappropriate by the issuing standards body. In addition, they prescribe ways to enrich the development process and the language effectiveness. In some respects, they define a new language, with specific emphasis on delivering greater security, improved predictability, increased robustness and better maintainability. Today most popular coding standards for security are the CERT C Secure Coding Standard; MISRA C:2012; and the C Secure Coding Rules (ISO/IEC TS 17961:2013).

For the purposes of comparison, the coding standards covered in this article have been assessed using nine categories, some of which include a qualitative indication of how the coding standards perform. The performance indicator (1 to 3 stars) is derived from considerations and impressions PRQA has collected from its wide customer base which, by any measure, can be considered an official endorsement of any standard. We categorized the standards as follows:

Industry: the original industry sector targeted by the coding standard.

Reference language version: the version of the C Standard that is currently used as a reference for the coding guidelines. This is important as it can influence the choice of coding standard for a project; for example, if C11 is to be used (for instance, because some of its features make it the most applicable for a given application) MISRA C:2012 is not a good candidate unless specific compliancy requirements make it necessary.

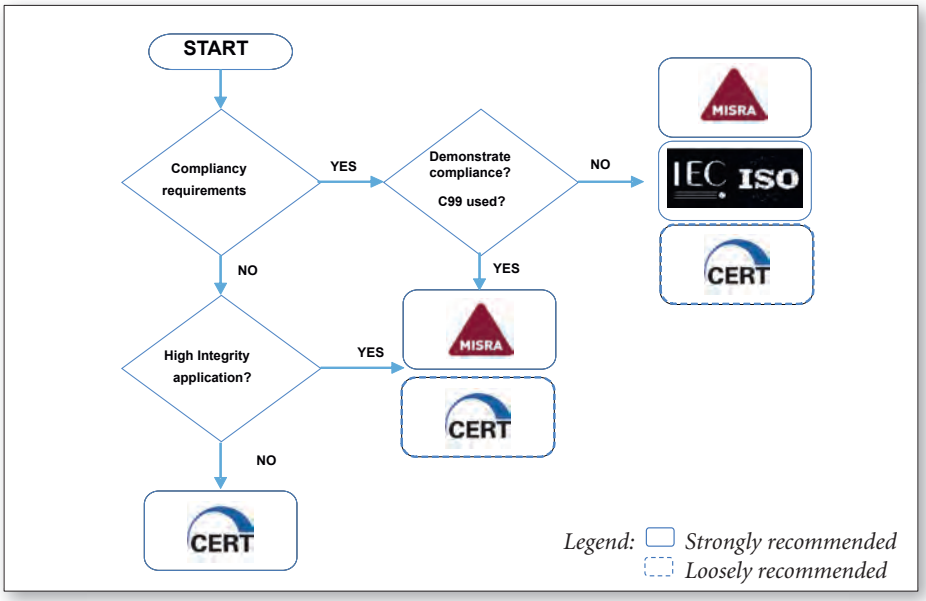

Figure 1. This simple flow chart helps to make an informed choice.

	CERT C	MISRA C:2012	ISO/IEC 17961:2013(E)
1 – Industry	Generic-agnostic	Embedded safety-critical applications	Generic-agnostic
2 - Reference Language Version	C11	C90, C99	C11
3 - Automatic Enforceability	★★	★★	★★★
4 – Coverage	★★★	★★	★
5 - Market Adoption	★★	★★★	★★
6 - Tool Availability	★★	★★★	★★
7 – Evolution	Wiki / Book		
8 – Resources	★★★	★★	★
9 – Examples	★★★	★★★	★★

Figure 3. Comparison table of CERT C, MISRA C: 2012, and IEC/ISO 17961:2013

Automatic enforceability: the ease of creation of automatic checks for the guidelines that don't result in false positives. This is usually related to how strictly or loosely specific guidelines are defined.

Coverage: a qualitative indication of the breadth of the coding standard scope and the number of guidelines defined. The broader the scope, the higher the educational value of the coding standard, but a broad scope can also bring complexity in terms of guideline maintenance and tool coverage.

Market adoption: the level of usage of the coding standard for real-world projects, in terms of formal compliance requirements (for example in functional safety applications) and voluntary usage to improve overall software quality.

Tool availability: the market availability of an automated code analysis tool to enforce the coding standard. This tends to be linked with the standards level of market adoption.

Evolution: a quickly evolving standard adapts better to feedback from the users and provides faster introduction of new features. This can be considered good for consumer products but bad for other sectors. CERT C uses two methods for publishing its guidelines; a web-based wiki, and a PDF document freely available. The wiki evolves faster than the latter.

Resources: this can include references to the C language standard, to other standards, papers, articles or other common knowledge bases that may be helpful.

Examples: descriptions to illustrate the issues related to the violation of a specific guideline and compliant solutions. The following page shows a comparison table covering the three featured coding standards and how they perform in the above categories.

There is no single best standard for secure coding. Selection must consider many different aspects, such as the duration of the project (where stability of the reference is more important), the version of the language being used and the existence of legacy code. The simple flow chart in figure 1 can help to make an informed choice.

Scenario 1. If the requirements dictate compliance with a recognized coding standard (a typical scenario would be a safety-critical application) then the choice should be MISRA C. The latest version of this standard is MISRA C:2012 Amendment 1. If a previous version of MISRA is mandated (for example MISRA C:2004) then the project will benefit from the addition of the security rules provided by ISO/IEC 17961:2013 (some work will be required to match the C version and remove any overlap – a good footprint would be the Addendum 2 of MISRA C:2012 "Coverage of MISRA C:2012 against ISO/IEC 17961:2012 C Secure").

Scenario 2. If the application has no compliancy requirements, and if there are no high-performance needs that would sacrifice code portability it is still recommended to adopt a high integrity perspective. In this case the recommendation would also be to use MISRA C:2012.

Scenario 3. In both previous scenarios CERT C could offer valuable support from a security perspective, and the recommendation would be to adopt CERT C in parallel with the suggested standards (in the flow chart this is indicated by a dashed line). However, if a high-integrity approach is not taken the MISRA C:2012 standard could be seen as too restrictive for the specific application, in this case the recommendation would be to only apply CERT C in order to achieve a good level of code security.

Choosing the right coding standard to adopt when developing secure code will depend on many factors, such as an understanding of the features and benefits of each standard and how they could meet the requirements of the current development project. The process shown in this article focuses on the ability to perform automated testing with tools such as PRQA static analyzers QA·C and QA·C++. Such tools perform deep analysis of software code to prevent, detect and eliminate defects and automatically enforce coding rules to ensure standards compliance. ■

Arrow accelerates IoT endpoint creation with new ARIS EDGE platform

Arrow Electronics has launched the ARIS EDGE development platform, which lets designers accelerate development of low-power IoT devices such as smart sensors, wearables, small appliances and battery-powered health care devices or other types of endpoints. ARIS EDGE provides hardware and essential software components that enable teams to get prototypes running quickly and focus attention on application development. Optimised for power-constrained IoT-edge devices, it features a Renesas Synergy S124 32MHz ARM Cortex-M0+ microcontroller.

News ID 5596

AdaCore: GNAT Pro 17 development environment for SYSGO's PikeOS RTOS

AdaCore has released its GNAT Pro 17.1 development environment for SYSGO's Real-Time Operating System PikeOS. With GNAT Pro 17.1, Ada users targeting PikeOS will see a number of product enhancements, including upgrades to the underlying code generator and debugger technologies (to GCC 6 and GDB 7.10, respectively), better elaboration order handling, improved stubbing in GNATtest, and enhanced debugger support in the GNAT Programming Studio IDE.

News ID 5426

Supermicro: new Atom C3000 portfolio of Embedded and IoT systems

Super Micro Computer introduced a full suite of all-in-one solutions optimized for the growing Embedded Appliance, Intelligent Datacenter and Network Edge markets. Supermicro's compact systems and motherboards optimized with the new Intel Atom C3000 SoC feature lower thermal and power requirements and can improve performance by 2.5X compared to the previous generation.

News ID 5527

N.A.T.: 2U MicroTCA.4.1 chassis for telecom, industrial and high energy physics

N.A.T. announced the NATIVE-R2, a powerful new 2U MicroTCA (MTCA.4.1, µTCA.4.1) chassis that is particularly suited to telecommunications, industrial and particle physics research applications. Supporting a single MCH and power unit, the NATIVE-R2 can accommodate six horizontally-mounted AdvancedMC modules (five mid-size and one full-size), up to five MicroRTMs and a JTAG switch module.

News ID 5518

Kontron: new boards and modules powered by Intel Atom C3000

Kontron announced that the new Intel Atom Processor C3000 product family will power new Kontron boards and modules to be released in late 2017. Products featuring 3rd-generation Intel Atom Processor technology will comprise the Kontron COM Express Computer-on-Module COMe-bDV7 in the basic type 7 form factor and a Kontron Mini-ITX motherboard.

News ID 5531

AAEON: connecting the IoT one touch panel at a time

AAEON launches the ACP product line, a series of elegantly designed, highly customizable touch panel PCs that will consolidate system integration, IoT and smart home applications, as well as providing a more flexible option for product lifecycle management and smart factory processes.

News ID 5519

Cadence: tool suites optimized for Arm Cortex-A75 and Cortex-A55 CPUs and Mali-G72 GPU

Cadence Design Systems announced that its full-flow digital and signoff tools and the Cadence Verification Suite have been optimized to support Arm Cortex-A75 and Cortex-A55 CPUs, based on Arm DynamIQ technology, and the Arm Mali-G72 GPU, the latest offerings from Arm for premium mobile, machine learning, and consumer devices.

News ID 5513

MEN: software package for safe train control system menTCS

The MEN Train Control System menTCS is an open computer platform for automated train operation and protection. With the programming interface Y-COM, which is now available, users can rely on a complete software package, partly with SIL 4-certified components. menTCS is a modular computer platform developed for safe control of all safety-critical functions in rolling-stock and wayside applications.

News ID 5509

HCC Embedded: software suits support Xilinx Zynq-7000 SoCs

HCC Embedded added support for the Xilinx Zynq-7000 All Programmable system-on-chip family of devices. Developers using Xilinx Zynq-7000 SoCs now have access to HCC's entire suite of advanced flash storage and communications middleware. Solutions for Zynq SoCs include fail-safe flash file systems; MISRA-compliant TCP/IP, TLS, and encryption; and USB with network integration, fail-safe bootloaders, and integration services.

News ID 5603

EKF: eight drive SATA SSD plug-in cassette

An ever-expanding data volume requires a reasonable storage solution for industrial systems. With eight SATA ports via the backplane, CompactPCI Serial systems are perfectly equipped for this purpose. EKF introduces the SDC-SATA cart, a plug-in unit for eight 2.5-inch size SATA drives. The cassette requires only 16HP (~80mm width) in a 3U system rack.

News ID 5497

congatec: quick starter set simplifies evaluation of COM Express Type 7 server-on-modules

congatec launches the new COM Express Type 7 quick starter set as the fundamental basis for OEM's modular micro server designs. The new quick starter set simplifies the evaluation of the first server-on-modules designed in accordance to PICMG's COM Express Type 7 standard, poised to be globally deployed in cloud, edge, and fog server applications.

News ID 5495

VITA: OpenVPX systems standard updated

VITA, the trade association for standard computing architectures serving critical and intelligent embedded computing systems industries, announces the ratification by ANSI of the third edition of the OpenVPX System Standard under ANSI/VITA 65.0-2017. This is a planned update to the architecture framework that defines system-level VPX interoperability for multi-vendor, multi-module, integrated system environments.

News ID 5524

Portwell: COM Express 3.0 type 7 basic module with four 10GbE interfaces

Portwell announces the release of the PCOM-B701, a COM Express 3.0 Type 7 Basic Module based on the Intel Atom processor C3000 product family. The PCOM-B701 is designed according to the new COM Express Type 7 standard which is a new specification with backward compatibility to the existing Type 6 pinout.

News ID 5528

More information about each news is available on www.Embedded-Control-Europe.com/magazine You just have to type in the "News ID". —

■ N.A.T.: MicroTCA.4.1 LLRF backplane

N.A.T. announced a new MicroTCA.4.1 low level radio frequency (LLRF) backplane for the distribution of high precision RF and clock signals in embedded computing systems aimed at high energy physics research and other applications: the NAT-LLRF-Backplane.

News ID 5523

■ Portwell: COM Express 3.0 module optimized for network appliances

Portwell released the PCOM-B700G, a COM Express 3.0 Type 7 Basic Module based on the Intel Xeon processor D-1500 product family. PCOM-B700G is designed according to the new COM Express Type 7 standard. The module optimizes value models and service levels by running network applications securely and reliably on virtualization-optimized platforms. In addition to the PCOM-B700G, Portwell also introduces a Type 7 evaluation carrier board, PCOM-C700.

News ID 5459

■ LieberLieber: Hirschmann makes waves with Embedded Engineer

Hirschmann Car Communication is a leading German supplier of transmitter and receiver systems. The company has long based its systems development on Enterprise Architect. Now, in a preliminary project for a remote tuner, LieberLieber Embedded Engineer is being used to generate executable source code from their UML system model.

News ID 5494

■ Green Hills announces Platform for Secure Connected Car

Green Hills Software has unveiled its Platform for Secure Connected Car, featuring the industry's most comprehensive solution for vehicle and smart city manufacturers building vehicle-to-anything and European car-to-anything On-Board Units and intelligent transportation infrastructure. This Platform enables a clear path for OEMs and Tier 1s to immediately address the range of challenges to design, develop and deploy the most secure and efficient V2V solutions for the next generation of vehicle awareness.

News ID 5438

■ LDRA upgrades object code verification for avionics to newest PowerPC chips

LDRA has updated the LDRA tool suite for the PowerPC assembler language to support all 32- and 64-bit PowerPC chips used in safety-critical environments such as communication terminals, commercial and military avionics, unmanned air vehicles, and missile and space flight applications. Such support enables LDRA customers, including those who have been using the LDRA tool suite for many years on traditional avionics platforms, to move to the latest versions of PowerPC chips and compilers, and confidently perform Object Code Verification required for DO-178B/C compliance.

News ID 5471

■ Kithara: real-time for universities

Kithara Software has announced the "Student Edition" of the »RealTime Suite«, which will be available for universities and colleges for the coming winter semester of 2017. Including the complete functional range of the software library, this version allows for an easy introduction to the programming of real-time functions.

News ID 5452

■ SEGGER: Embedded FTP server now available in a free PC tool

SEGGER introduces a free tool empowered by its embOS/IP FTP Server add-on. The tool serves as a full FTP Server that is set up with minimal effort. It will run on a Windows, Mac or Linux based machine.

News ID 5552

■ IAR Systems joins STMicroelectronics partner program

IAR Systems announces that it has joined the STMicroelectronics Partner Program to enable accelerated product development and continued innovation for embedded developers worldwide. IAR Systems is also exhibiting at the ST Developers Conference, September 6 in Santa Clara, CA, United States.

News ID 5573

■ Renesas: Synergy platform expands IoT device-to-cloud connectivity

Renesas Electronics announced the latest update of its Renesas Synergy Platform, the first qualified, maintained and fully supported software/hardware platform that accelerates time to market, reduces total cost of ownership and removes the obstacles engineers face designing Internet of Things products. The Renesas Synergy Platform consists of fully integrated software, development tools and a family of scalable microcontrollers with no upfront fees or back-end royalties – everything is included in the purchase price of the MCU device.

News ID 5574

■ Vector Informatik: PREEvision 8.5 supports ReqIF and KBL 2.4

PREEvision 8.5 supports additional industry standards for flexible data exchange in E/E engineering: The current release allows for importing and exporting the exchange formats ReqIF and KBL 2.4. Thus, Vector Informatik once again facilitates cooperation between manufacturers and suppliers in the model-based development of distributed embedded systems.

News ID 5544

■ AdaCore releases QGen 17.1 for model-based development and verification

AdaCore released QGen 17.1, the latest version of its model-based development and verification toolset. QGen bridges the gap between control engineering and software engineering, helping customers in the automotive and aerospace industries, as well as other safety-critical software-intensive domains, take full advantage of model-based development while retaining the low-level control necessary to achieve full integration with target hardware.

News ID 5428

■ PragmaDev launches modeling contest for students in the area of IoT

PragmaDev Studio modeling and testing technologies are perfect to describe the expected interactions between generic entities. The rapid development of the internet of things raises new challenges related to deployment, security, and ecology. In that context, the objective of the competition is to specify a network protocol that addresses the aspects meshed networks, security handling, identity management and energy saving.

News ID 5607

■ QA Systems: SGS-TÜV certify Cantata version 7.2 for all major software safety standards

Cantata has been certified by SGS-TÜV Saar GmbH as "usable in development of safety related software" up to the highest safety integrity levels for all main safety related standards: IEC 61508:2010 (general industrial) , ISO 26262:2011 (automotive), EN 50128:2011 (railways), IEC 60880:2006 (nuclear power) and IEC 62304:2006 (medical devices).

News ID 5599

■ Farnell element14 adds thermal imaging camera to its test & measurement portfolio

Farnell element14 is now shipping the new FLIR ETS320 Thermal Imaging camera, designed for quick temperature checks on printed circuit boards and other small electronics in the laboratory and accurate quality assurance and factory acceptance testing.

News ID 5488

■ Manhattan Skyline: MIPI interface TFTs

Winstar have announced a new range of TFT LCDs with a MIPI Interface. The MIPI Display Serial Interface (MIPI DSISM) defines a high-speed serial interface between a host processor and a display module. The interface enables manufacturers to integrate displays to achieve high performance, low power, and low electromagnetic interference (EMI) while reducing pin count and maintaining compatibility across different vendors.

News ID 5581

Infineon: CoolMOS P7 available in a SOT-223 package

Infineon Technologies is expanding its recently launched CoolMOS P7 technology with a SOT-223 package. The device has been developed as a one-to-one drop-in replacement for DPAK. It is fully compatible with a typical DPAK footprint. The combination of the new CoolMOS P7 platform with the SOT-223 package is a perfect fit for applications such as charger for smartphones, laptop adapters, TV power supply, and lighting.

News ID 5545

Wibu-Systems joins Dell IoT solutions partner program

Wibu-Systems have become a Dell IoT Solutions Partner. The Dell IoT Solutions Partner Program is designed to give Technology and Services Providers the tools needed to focus on the advancement of commercial and industrial IoT solutions. The program enables ISVs, OEMs, developers and end customers to find the right tools to deploy scalable, differentiated solutions on top of Dell's broad portfolio of IoT-enabling technologies. Through this partnership, Dell customers can easily deploy Wibu-Systems IP protection and IoT software licensing and license tracking solution on their Dell Edge Gateway 5000 Series and Embedded Box PC 3000 and 5000 Series systems.

News ID 5575

Hyperstone: high reliability CompactFlash controller adds 3D Flash memory support

Hyperstone introduced their new F9 - CompactFlash memory controller. The F9 is targeting industrial and high-end CompactFlash cards and embedded IDE disk-on-modules. In conjunction with Hyperstone's hyMap Flash translation layer and hyReliability firmware features, the F9 provides enhanced endurance and data retention management, as well as rigorous power fail-safe features.

News ID 5507

Express Logic: comprehensive solution portfolio for safety-critical IoT devices

Express Logic that its industrial-grade FileX high-performance FAT-compatible file management system has achieved compliance with UL 60730-1 Annex H, CSA E60730-1 Annex H, IEC 60730-1 Annex H, UL 60335-1 Annex R, IEC 60335-1 Annex R, and UL 1998 safety standards for software in programmable components.

News ID 5515

Maxim: extend battery life of USB Type-C devices with flexible buck converter

Developers of multi-cell, USB Type-C products that need higher current, dual input, and I²C support now have a flexible option with the MAX77756 24V, 500mA, low quiescent current buck converter from Maxim Integrated Products. USB Type-C products must generate an always-on 3.3V rail to detect USB insertions. Products utilizing the Power Delivery voltage range (5V to 20V) can generate an always-on (1.8V/3.3V/5.0V) digital supply rail for the port controller using the MAX77756 step-down converter.

News ID 5516

Mouser shipping MAX32625MBED Arm Mbed-enabled development platform

Mouser Electronics is now stocking the MAX32625MBED Arm Mbed-enabled development platform from Maxim Integrated. The MAX32625MBED board provides a complete, functional system for developing and debugging a variety of low-power embedded systems, such as sensor hubs, connected sports devices, wearable medical patches, and fitness monitors.

News ID 5551

GeneSys: high-precision GNSS receiver for localisation of VRUs and solid objects

GeneSys is offering a new turnkey solution for the development of driver assistance systems focused on the localisation of fixed objects and on vulnerable road users (VRU) participating in the road test. The achievable position accuracy is ± 2 cm. The key feature here is Spectra Precision's SP80 which was greatly enhanced in terms of functionality and exclusively adapted to the application in a joint development with GeneSys.

News ID 5541

Sensirion: Airspeed sensors revolutionize workflow with PX4 VTOL drones

The SDP3x is a small differential pressure sensor and now available in an airspeed sensor development kit for VTOL (vertical take-off and landing) and fixed-wing UAV applications. The reference design was developed in collaboration with PX4 Pro and is fully integrated with the open source autopilot. The integration includes a full aerodynamic software compensation model for the sensor and pitot tube, making it a plug-and-play solution.

News ID 5577

Arrow Electronics signs global agreement with Bosch Sensortec to address IoT

Arrow Electronics has signed a global distribution agreement with Bosch Sensortec to supply Bosch Sensortec products. Bosch is a leading supplier of MEMS (microelectromechanical systems) sensors worldwide. It has built on an initial base in automotive applications to expand its offering to consumer electronics markets and now provides a diverse portfolio of MEMS devices for the Internet of Things.

News ID 5491

boards & solutions ECE

Editors
Jürgen Hübner
phone +49(0)8092-2477413
fax +49(0)8092-2477429
jh@iccmedia.com

Wolfgang Patelay
wp@iccmedia.com

Tony Devereux
tony.devereux@tiscali.co.uk

For Reader Inquiries and Address Changes **please contact:**
info@iccmedia.com

Sales & Marketing Director
Manfred Blumoser
phone +49(0)8092-2477411
fax +49(0)8092-2477429
mb@iccmedia.com

Claudia Mellein
cm@iccmedia.com

Christiane Lockner
cl@iccmedia.com

Sales Office - UK and USA, Benelux, Scandinavia
Blue Sky Communications
Malcolm Cameron
21 Cliffe Avenue
Westbrook,
Margate, Kent CT9 5DU, UK
phone +44 (0)77 88-10 84 11
fax +44 (0)80 82-8010 57
mc@blue-sky-communications.com

Sales Office - Asia
Jean Cheng, *jean@i-media.com.tw*
Vivian Hung, *vivian@i-media.com.tw*
Innovative Media Information & Services
7F-3, No. 26, Sec. 2, Ming-Quan East Rd.
Taipei 104 Taiwan
phone +886 2 2563 1186

Head Office
ICC Media

ICC Media GmbH
Rauwagnerstr. 5
85560 Ebersberg / Germany

Editorial Office UK
36a Blackacre Road
Theydon Bois
Essex, CM16 7LU

Toshiba: 3D Flash Memory with TSV technology with high speed data input and output

Toshiba announced development of the BiCS FLASH three-dimensional flash memory utilizing Through Silicon Via (TSV) technology with 3-bit-per-cell (triple-level cell, TLC) technology. Devices fabricated with TSV technology have vertical electrodes and vias that pass through silicon dies to provide connections, an architecture that realizes high speed data input and output while reducing power consumption. Real-world performance has been proven previously, with the introduction of Toshiba's 2D NAND Flash memory.

News ID 5440

Infineon: packaged MEMS microphones with a 70 dB signal-to-noise ratio

Infineon Technologies is entering the packaged silicon microphone market. With this it is addressing the needs for high performance, low noise MEMS microphones. The analog and digital microphones are based on Infineon's dual backplate MEMS technology and distinguish themselves with a 70 dB signal-to-noise ratio.

News ID 5479

ROHM: evaluation boards for USB type-C USB power delivery

ROHM has recently announced the availability of USB Power Delivery (USBPD) compatible transmitter/receiver evaluation boards designed to connect to information and peripheral devices using the new Type-C connector. The new USB Type-C connector and USB Power Delivery standard developed by the USB Implementers Forum are attracting increased attention, featuring a breakthrough interface that boasts a compact, reversible/flippable connector capable of simultaneously transmitting data and scalable power over a wide range.

News ID 5445

Apacer: DDR4 wide temperature memory modules reinforced with underfill technique

Apacer Technology, with the full support of its strategic partner Samsung Electronics, has built its DDR4 wide temperature memory module series with positive market response. Using industrial-grade chips, the memory module series provides a rugged solution for industrial equipment operating under extreme temperatures for long hours.

News ID 5464

Xilinx: SDAccel development environment available for Amazon EC2 F1 instances

Xilinx announced that its software defined development environment, SDAccel, is now available on Amazon Web Services for use with Amazon Elastic Compute Cloud (Amazon EC2) F1 instances. Amazon EC2 F1 instances provide reconfigurable, custom-hardware acceleration with 16nm Virtex UltraScale+ FPGAs enabling customers to meet the demands of compute-intensive workloads like data analytics, video processing and machine learning.

News ID 5602

Würth Elektronik: get to your virtual component faster

Würth Elektronik eiSos has integrated component libraries for Altium, Cadence OrCAD & Allegro, CADSTAR, Eagle, LTspice, Modelithics and S-Parameter to create a special service for electronics developers. Whereas up to now the data models have been available as downloads on the individual product pages of the online catalogue, Würth Elektronik eiSos now provides them centrally in a clearly arranged fashion, accessible by the target software.

News ID 5584

Renesas: PLC solution enables voice communication over power lines

Renesas Electronics announced a new voice-over-power line communication solution that enables both data communication and voice communication capabilities over existing power networks. The PLC solution reduces the amount of internal wiring required in buildings, enabling reduced implementation and maintenance costs for public address systems and security systems.

News ID 5601

NXP introduces 8-bit S08 MCU measuring 3 x 3 x 0.9 mm

NXP Semiconductors announced its smallest 8-bit S08 microcontroller – the MC9S08PA4AVDC microcontroller. Measuring just 3 x 3 x 0.9 mm, this new package helps address the growing challenge of shrinking PCB space for tomorrow's technologies, without increasing BOM costs. The MC9S08PA4AVDC can be used in various size-limited applications such as industrial control, BLDC motor control and Internet-of-Things control that requires a tiny MCU.

News ID 5569

ams: magnetic position sensors with ISO26262 compliance

ams announces a new series of magnetic position sensors with increased safety and diagnostic capabilities to help automotive OEMs achieve the highest in ISO26262 ASIL system safety-level compliance. The AS5270A/B devices are ideal for many automotive applications including brake and gas pedals, throttle valve and tumble flaps, steering wheel position, chassis ride-height, Exhaust Gas Recirculation (EGR) valves, fuel-level measurement systems, and 2/4 wheel drive switching.

News ID 5424

Advertisers Index

Laird: 802.11ac Wi-Fi + Bluetooth 5 module for challenging wireless environments

Laird introduced a new series of Wi-Fi and Bluetooth modules that provide unmatched connectivity, and improves network efficiency and spectrum use. The new modules also enable optimal mobile device performance in the most challenging wireless environments. The Sterling 60 family of certified 802.11ac 2x2 MU-MIMO Wi-Fi + Bluetooth v4.2 modules (Bluetooth 5 SIG certified Q4 modules) is the first of two classes of modules that will give developers unmatched flexibility in wireless design.

News ID 5560

Pentair: higher efficiency and larger temperature range for power supply portfolio

Pentair is updating and streamlining its Schroff power supply portfolio. Various series of AC power supply products are being combined into the MaxpowerPro product family. The first devices in the new Maxpower supply unit series feature 180 W of output and are currently available. The power supply units from the former SEK series have been redesigned and are now available under the name Max50.

News ID 5553

IAR eases development for industrial applications based on Renesas' EC-1

IAR Systems presents its tool solution for simplified evaluation and development of Renesas Electronics' EC-1, a dedicated communication SoC with a built-in EtherCAT slave controller, intended to boost production efficiency in factories. In addition, IAR Systems announces that the company has joined EtherCAT Technology Group to provide reliable solutions for industrial applications.

News ID 5434

SEGGER: IP-over-USB technology enables easy browser access for USB devices

SEGGER introduces its new IP-over-USB technology. It lets the web browser easily access a USB device from any host: Windows, Linux, or macOS. Communicating with the built-in web server of the USB device, it can visualize status information in real-time, as well as configure the device.

News ID 5503

Keysight collaborates with Sequans on NB-IoT, LTE Cat-M1 test solutions

Keysight Technologies announced an agreement with Sequans Communications whereby Keysight will use Sequans' Monarch LTE for IoT chip platform to provide support for NB-IoT and LTE-M customers using Keysight's E7515A UXM wireless test set. The integration assures customers that they have their test needs covered for IoT deployments and are in compliance with 3GPP standards.

News ID 5504

Mouser: Microchip ATtiny1617 AVR MCUs feature event system controller

Mouser Electronics is now stocking the ATtiny1617 microcontroller series from Microchip Technology. Part of Microchip's low-power 8-bit AVR microcontroller portfolio, the ATtiny1617 devices offer pin and code compatibility with the ATtiny817 series devices while extending the flash memory.

News ID 5463

Ashling: solving critical bugs with Ultra-XD trace probe

Imagine a scenario where you have issues debugging your hardware immediately after a reset or power-up. For example, a complex bug occurs immediately after the target hardware is powered-up, and only happens when executing code in real-time from reset. Using a strategy like setting a breakpoint immediately after reset and then stepping through the code, will not help solve the problem because in this case the breakpoint causes the bug to disappear.

News ID 5460

AdaCore: CodePeer officially registered as CWE-compatible

AdaCore announced that its CodePeer advanced static analysis tool for Ada has been formally designated as "CWE-Compatible" by the MITRE Corporation's Common Weakness Enumeration (CWE) Compatibility and Effectiveness Program. This program is a web-based initiative that consolidates and organizes information about cyber-security products and services.

News ID 5431

Vector Informatik: AUTOSAR-compliant diagnostic configuration at the press of a button

With version 8.5 SP2 of CANdelaStudio, Vector presents a solution for the creation of AUTOSAR-compliant configurations of the diagnostic basic software for vehicle ECUs. It enables development teams at vehicle and ECU manufacturers to generate AUTOSAR Diagnostic Extract (DEXT) files at the press of a button.

News ID 5539