boards & solutions + ECE

Combined Print Magazine for the European Embedded Market

November 06/15

COVER STORY:

Modular embedded NUC systems with Qseven modules

Bringing two SGET Standards together

SPECIAL ISSUE
Industrial Control

SPECIAL FEATURES:

- Boards & Modules
- Industrial Communications
- Industrial Internet-of-Things

Dear Readers,

And once again its show time! Beside the exhibition Embedded World in springtime there is another important event for the embedded community in Germany: SPS IPC Drives in fall. This year this international exhibition for industrial automation will be held from 24th to 26th of November in the Exhibition Centre in Nuremberg. More than 1,600 exhibitors including all key players in this industry will present their innovations and trend-setting new products as well as future technologies. Main focus of many exhibitors this year will be Industrie 4.0. To simplify it for visitors getting information about this important topic the organizer created for the first time the "Industrie 4.0 Area" in Hall 3A. In this area there will be the joint stand and forum "Automation meets IT" which will present data based business models as well as IT based automation solutions for the future digital production. The joint stand "MES goes Automation" will show how the use of MES optimizes order processing and production processes. The special show space SmartFactory will demonstrate the multi-vendor intelligent factory of the future. Industry associations ZVEI in hall 2 and VDMA in hall 3 will offer competent lectures and panel discussions about actual topics. The joint stands "AMA Centre for Sensors, Test and Measurement" and VDMA´s "Machine Vision" in hall 4A as well as "Wireless in Automation" will inform visitors extensive about the respective topics.

And the content of this combined issue of ECE and Boards & Solutions is also focused on the topic automation. As usual in the embedded market there are always various form factors created as standard and today there is no difference: Our cover story starting at ***page 6*** introduces and describes in detail the advantages of embedded version of NUC (Next Unit of Computing) which was created by Intel in 2012. The SGET (Standardization Group for Embedded Technologies e.V.) adapted this form factor to suit the requirements of embedded and IoT applications and published the official 1.0 version of the embedded NUC specification at the beginning of 2015. Essentially, it defines an embedded form factor, which uses the 4 x 4 inch format (101.6mm x101.6mm) of the commercial NUC form factor and turns it into an industrial-grade as well as processor vendor-independent version. A system design specification is currently in the pipeline.

Furthermore the interview with Jim Liu, Founder and CEO of ADLINK Technology gives an interesting insight in this company. This year, the company is celebrating its 20th anniversary. Over the past 20 years, it has evolved from a T&M instrument supplier to a leading provider of robust, reliable solutions in industrial automation, healthcare, defence, transportation, communications, and infotainment, while consistently growing its market share in T&M. And it raises the bar for the future.

But there are much more articles to inform you what´s actual going on in the embedded industry.
And if you like you can ***visit our booth 160 in hall 3A.***

Yours Sincerely

Wolfgang Patelay
Editor

Cover Photo:
congatec and ies

Cover Story:

embedded NUC with Qseven modules brings two SGET standards together 6

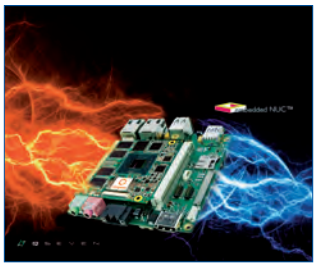

Embedded NUC is the new form factor standard from SGET for both boards and system designs. When combined with Qseven, modular Box PC designs can be created which, despite their highly individual interface options on the module and the board as well as on the system, are all SGET standard-based.

MCU enables simple creation of EtherCAT applications 16

This article introduces the microcontroller XMC4800 which contains specialized functions and features to simplify EtherCAT applications. It is the first microcontroller with an integrated EtherCAT slave controller and analog/mixed signal IP using the Cortex M4 processor from ARM.

Controlling graphics without a controller 26

This article shows how a low-cost controllerless graphics system can be implemented with microcontroller peripherals to create a virtual graphics controller using only a small amount of CPU time.

Building blocks for IoT: COM Express modules with latest Intel processors 32

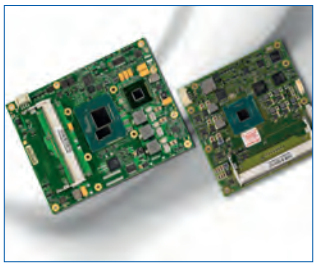

Embedded systems specially optimized for IoT applications, to satisfy customer requirements, can only be quickly implemented with a comprehensive pallet of predefined building blocks. As core blocks, MSC Technologies offers three new module families with scalable performance based on state-of-the-art Intel processor technologies.

Leveraging modularity in embedded design to accelerate IoT proliferation 34

This article explores how adopting the modular approach in developing IoT devices can accelerate the proliferation of IoT. We will see exponential growth of IoT applications, but cost will determine user acceptance and market penetration. COM/SOM offer an ideal cost-effective platform for making this growth possible.

embedded NUC with Qseven modules brings two SGET standards together

By Christian Eder, congatec **and**
Ansgar Hein, ies - intelligent embedded systems

Embedded NUC is the new form factor standard from SGET for both boards and system designs. When combined with Qseven, modular Box PC designs can be created which, despite their highly individual interface options on the module and the board as well as on the system, are all SGET standard-based.

■ Initially, the NUC (Next Unit of Computing) form factor was introduced by Intel in 2012 addressing commercial applications. The SGET (Standardization Group for Embedded Technologies e.V.) adapted this form factor to suit the requirements of embedded and IoT applications and published the official 1.0 version of the embedded NUC specification at the beginning of 2015. Essentially, it defines an embedded form factor, which uses the 4 x 4 inch format (101.6mmx101.6mm) of the commercial NUC form factor and turns it into an industrial-grade as well as processor vendor-independent version. A system design specification is currently in the pipeline.

The extension of the commercial NUC specification basically adds extra mounting holes, a recommended long-term availability of at least five years and a cooling solution for fanless designs in completely sealed cases. The exact definition of the position of the external interfaces on the board and two fundamental types of interfaces:
Type 1 boards have at least 1 LAN and two USB interfaces in the leanest configuration; Type 2 boards are equipped with a further LAN interface as well as 2x UART/COM ports and a PCI Express slot for Mini-PCIe or mSATA extensions. This makes embedded NUC suitable for headless systems, which are designed without graphics support as pure control systems or IoT gateways. For both variants, however, additional interfaces are also recommended such as two further USB ports, 1x SATA, 1x SD/mSD socket, 1x Video Out (HDMI, DP, RGB, LVDS) and 1x audio. Designers therefore can work with clear guidelines to provide standard feature sets for embedded NUC systems. To enable this, 88mm wide interface mounting areas on both the front and rear part of the board are available. Basically, on the embedded NUC boards any external interface required by the application can be supported, such as CAN (native support by Intel Atom processors) or MIPI-CSI (native support by some Intel Pentium and Celeron processors and by a range of ARM processors).

To some extent, individual interface customization can therefore be considered part of the embedded NUC standard, thus enabling space-saving applications. These range from simple serial interface integration for legacy applications, through IoT gateways and systems on processing level with field connection, up to fanless 15 watt Panel PCs with extremely high-performance SoC graphics. Designers can take two different courses when developing industrial-grade NUC systems. They can either develop new boards from scratch with the desired features or they can build an embedded NUC-compliant carrier board for the required feature set and deploy Computer-on-Modules as a computing core. This way, there is no need to implement the processing core on every board, but it can be integrated, for example, via separately purchased Qseven modules.

Apart from considerably less work in terms of development and testing of the individual embedded NUC boards, thanks to the module scalability customers benefit from the easy adaptation of existing NUC carrier boards to meet custom-specific needs. On top of this, the solution presents an interesting economic aspect for future updates, for example, when migrating from the Intel Atom E3800 processor family platform (codenamed Bay Trail) to Intel Pentium and Celeron processors (codenamed Braswell).

Qseven modules in particular offer extreme flexibility due to a host of different variants, from Intel Pentium, Celeron and Atom designs to AMD Embedded G-Series and µQseven modules with ARM Cortex A9-based Freescale i.MX 6 processors, plus they are future-proof. As embedded NUC has been derived from the Intel NUC designs, currently the market is experiencing a particularly large rise in demand for embedded NUC designs with x86 processor technology. These designs are deployed in applications, where commercial NUC variants fail to meet requirements in terms of robustness, noise immunity or 24/7 continuous operation,

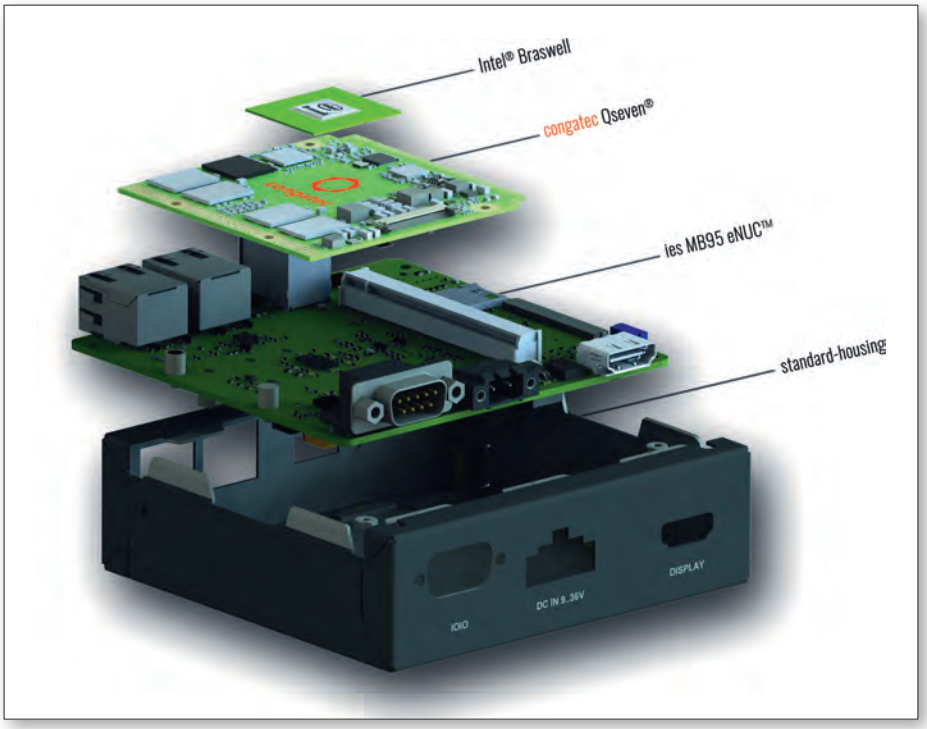

Figure 1. The ies eNUC-Box is available with congatec Qseven modules.

Figure 2. Qseven modules from congatec with Intel, AMD or Freescale processors make the modular embedded NUC systems from ies extremely scalable.

or also lack long-term availability for assembly parts and component groups. Typical application cases for embedded NUC can be found in MES systems and thin clients in harsh environments, HMIs in industrial manufacturing, diagnostic computers in the clinical field, POS/POI systems as well as ticketing machines in indoor and outdoor areas, and also in digital signage and infotainment systems for shopping malls or public transport. Embedded NUC systems are, however, also recommendable for applications destined for deployment in industrial environments, as any fieldbus can be connected via Mini-PCIe support or internal USB extensions and Type 2 boards offer standard 2x UART/COM support. Dual LAN support additionally enables (Industrial) Ethernet LAN to be looped through, which eliminates the need for star cabling on horizontally networked industrial processing computers which in turn saves meters and meters of cables by line topologies. With the modular embedded NUC based on Qseven, designers have access to a highly flexible specification with which they can create extremely individual boards and systems as standardized small form factor designs. In addition, Qseven provides carrier board design guides and established training and workshop programs which cover all aspects necessary for fast entry into the modular ecosystem. The high level of standardization and the very wide availability of solutions based on this standard, which has grown significantly since the specification was published, increase the overall market potential of embedded NUC in the industrial environment as they boost design re-use opportunities and lower development costs. Last but not least, third party support and long-term availability are guaranteed. In some ways, embedded NUC is the most specific carrier board form factor for Qseven. But it doesn't leave NUC developers tied to Qseven. By taking a modular approach, they can also opt for other computer module form factors such as COM-Express Mini.

The high level of modularity and the compact design of embedded NUC systems make them a sort of modern successor to the formerly very successful PC/104 form factor. Only the construction height of embedded NUC is much slimmer – which is no disadvantage. And a further practical bonus point is that the interfaces are mounted directly on board. Internal cabling which – in the case of PC/104 – was required for external interfaces has been eliminated. Behind the modular embedded NUC concept stands the independent standardization board SGET, which is committed to further developing this vendor-independent standard. This helps set embedded NUC systems apart from the very heterogeneous market of industrial Box PCs and, while support continues to increase, brings them to a significant market position compared to proprietary Box PCs.

At Embedded World 2015, Pentair presented a matching case concept based on the tried and tested Schroff Interscale concept for small form factors. The cases can be designed flexible and offer two standard versions for embedded NUC: the Interscale M with perforations for passive convection cooling and the Interscale C with an integrated conduction cooling element. Additionally, EMI and IP30 dust protections as well as flexible heat conducting elements are integrated which are variable in height to compensate tolerances along the heat path, thus guaranteeing optimal heat transfer. The eNUC-Box from ies uses the Pentair case concept and integrates a congatec Qseven module on the BB95 base board.

With the eNUC-Box, available not only with AMD Embedded G-Series SoC processors (codenamed Steppe Eagle) but now also with Qseven modules based on the Intel Atom processor generation E3800 (codenamed Bay Trail) as well as Intel Pentium and Celeron SoC processors (codenamed Braswell), very different applications can be catered for. Owing to

ADLINK TECHNOLOGY INC.

Extreme PC/104 - Reliable, Proven, Durable

- Designed for harsh environments and extended temperature
- Resists shock and vibration
- Extended product lifecycles

CMx-BTx

Extreme Rugged PC/104 SBC with Intel® Atom™ E38xx Series SoC

- Bus type: PC/104, PC/104-*Plus*, PCI-104
- SATA, GbE, USB 3.0, USB 2.0
- Up to 4GB DDR3L SO-DIMM
- Supports VGA and LVDS

CM1-86DX3

Extreme Rugged PC/104 SBC with Vortex86DX3 System-on-Chip

- Follows Form Fit Function approach: CM-435/430
- Full ISA bus support
- 2GB soldered DDR3L memory
- SATA, CFast, GbE, Fast Ethernet
- VGA and 18/24-bit single channel TTL/TFT

CM-920

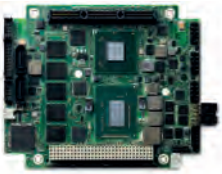

PCI/104-Express SBC with Intel® Core™ Processor

- Max. 4GB soldered DDR3 memory
- HDMI, VGA, LVDS display interfaces
- 8GB industrial grade SSD
- SATA, CFast, GbE, Fast Ethernet
- PCI/104-Express Type 1

SEMA-Cloud

Build Your Internet of Things with SEMA-Cloud

- Manage and control your devices remotely in the Cloud
- Transfer Data from devices to the Cloud for applications
- Reduce system downtime by predictive maintenance
- Perform firmware/software updates remotely

ADLINK TECHNOLOGY, INC

- *Tel: +49 621 43214-0*
- *Fax: +49 621 43214-30*
- *emea@adlinktech.com*
- *www.adlinktech.com*

20th ANNIVERSARY ADLINK

EXTREME RUGGED

intel IoT Solutions Alliance Premier

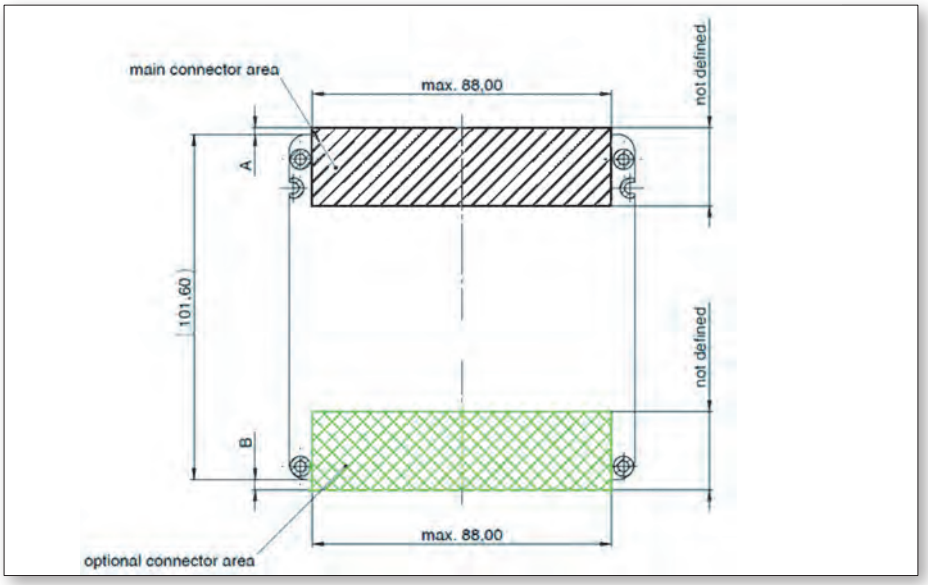

Figure 3. The Box PC specification embedded NUC offers 88 mm wide spaces at the front and rear for custom-specific interfaces.

the flexible case concept, for instance, designs with or without integrated WLAN are possible. Projects requiring extended temperature range support of -40°C and +85°C can be based on Qseven modules with Intel Atom E3800 processors. The eNUC-Box with congatec Qseven modules based on Intel Pentium and Celeron are destined for high-end applications in the fields of medical imaging or graphics-rich digital signage with energy consumption of just a few watts. The MIPI-CSI2 camera interface integrated in Qseven 2.0 modules makes this an attractive solution for vision-based applications. And opting for the Qseven range of low-power AMD Embedded G-Series modules is attractive in terms of price. Alongside the powerful computing performance, they offer superior, powerful AMD Radeon-based graphics. This makes them ideally suited for thin clients as well as for graphics-heavy applications in the field of gaming, digital signage and medical imaging. ■

Product News

■ Bayer presents Xilinx UltraScale 3/4-length PCIe board from Bittware

BittWare's XUSP3S is a 3/4-length PCIe x8 card based on the Xilinx Virtex or Kintex UltraScale FPGA. The high-performance UltraScale devices provide increased system integration, reduced latency, and high bandwidth for systems demanding massive data flow and packet processing. The board offers flexible memory configurations supporting up to 64 GBytes of memory, sophisticated clocking and timing options, and four front panel QSFP cages, each supporting up to 100 Gbps (4×25) – including 100GigE.

News ID 3601

■ AAEON expands BT boards to Qseven and SMARC form factors

AAEON introduces new additions to their BT product line with two new form factor boards, the AQ7-BT and µCOM-BT. Building on two of the most recent form factors on the market, the Qseven and Smart Mobility Architecture (SMARC) form factors, the AQ7-BT and µCOM-BT are the company's latest solutions powered by the low-power consuming, yet versatile Intel Atom/ Celeron E3800 processors.

News ID 3595

■ Pentair: subracks for high shock and vibration requirements

Subracks can sometimes be subjected to a wide variety of demands in terms of mechanical stability in certain applications — shock and vibration resistance for example. Pentair has addressed this challenge by offering Schroff subracks for shock and vibration requirements between 5 and 25g as part of its standard product portfolio. These subracks are designed for use in fields such as transport, railway, industrial (eg, close to rotating machines), power stations, and defence technology.

News ID 3591

■ Axiomtek: wide-voltage range, fanless 3.5-inch Embedded SBC

Axiomtek has launched CAPA843, a fanless 3.5-inch embedded board, featuring quad-core Intel Celeron processor J1900 SoC. A pair of SO-DIMM sockets supports up to 8GB of DDR3L 1066/1333MHz RAM. The compact-size embedded board CAPA843 was designed with emphasis on expandability, offering two full-size PCI Express Mini Card slots, as well as an exclusive Axiomtek ZIO connector. With excellent thermal design, the 146 x 102mm embedded SBC can handle operating temperatures from -20 to 70°C, and runs on +10 to +24V DC input.

News ID 3575

■ Neousys: server-grade Gigabit NIC with PoE+ capability

Neousys Technology Introduced the PCIe-PoE354at, a 4-port server-grade Gigabit 802.3at PoE+ frame grabber card. It exploits the cutting-edge Intel I350 GigE controller to deliver server-grade Ethernet performance. Inheriting Neousys' expertise in PoE technology, PCIe-PoE354at possesses four IEEE 802.3at PoE+ ports. Each can supply up to 25.5W power to its connected PoE PD device, such as industrial GigE camera, WIFI AP and surveillance IP cam.

News ID 3496

■ DFI: Embedded solutions with 6th Gen Intel Core processors

DFI introduces its new products based on 6th Gen Intel Core processor family, and it includes the following: 12 industrial motherboards, 2 single board computers, 4 COM Express modules and 1 compact ULT-based embedded system. These latest Intel Core processors are built on Intel's new 14nm technology using 2nd generation 3-D tri-gate transistors and deliver blazing fast computing and graphics performance.

News ID 3457

■ Vecow: quad core 5th gen Intel Core i7 fanless Embedded system

Vecow launches her latest performance driven embedded computing creation, ECS-8000 Series Fanless Embedded System. Powered by Quad Core 5th generation Intel Core i7 mobile processor running with advanced Intel QM87 chipset, dual channel DDR3L 1600MHz up to 32GB memory, delivering up to 15% system productivity than former generations.

News ID 3456

■ congatec: thin Mini-ITX motherboards offer powerful graphics at just 3 watts

congatec is extending its industrial-grade Thin Mini-ITX motherboard portfolio to include graphics-rich conga-IA4 boards with 14 nm Intel Pentium and Celeron processors and full Windows 10 support. Compared to their predecessors, the new Thin Mini-ITX boards offer increased computing and graphics performance as well as support for up to three 4k displays.

News ID 3563

Concurrent extends VMEbus shipments beyond 2020

Concurrent Technologies announces VP F1x/msd, a 6U processor board extending the choice of long-life VMEbus products designed to be available beyond 2020 without significant end of life component issues. In particular, VP F1x/msd uses the same tried and tested VME64 bridge device as the two other new VME boards announced in 2015 by Concurrent Technologies.

News ID 3557

Aitech: modular rugged Compact PC with multiple I/O options

Aitech Defense Systems has released a low profile rugged compact PC (RCP) that provides exceptional design flexibility in a low power, high performance computing system. Developed around a standard Type 6 COM Express module, the new A172 features an industry standard pinout and the ability to support multiple processor options for easy system integration as well as cost effective technology insertion upgrades.

News ID 3537

EKF: XMC standard mezzanine card with a dual port 10Gbps Ethernet controller

EKF introduces the DN3-SHARK, an XMC standard mezzanine card, equipped with a dual port 10Gbps Ethernet controller. Both ports are available via SFP+ front bezel connector cages, suitable for attachment of either optical cables via SFP+ transceivers or SFP+ twin axial copper cables. The Intel 82599ES Ethernet NIC is known for its high performance, low latency, reliability, and flexibility.

News ID 3529

Avalue: IEC EN60945 certified marine Embedded Box PC

Avalue launches the EMS-CDV-Marine IEC EN60945 Certified Marine Embedded system for maritime applications, such as control room, IBS (integrated bridge system), propulsion control or safety system. Designed with high reliability and low maintenance, EMS-CDV-Marine is a powerful and versatile embedded system featured with a range of graphics, I/O extension flexibility and robust designs to provide configurability to meet a range of maritime applications with the marine certification approval.

News ID 3525

MSC: Qseven module with Freescale i.MX6 targets cost-sensitive applications

MSC Technologies presents its Q7-IMX6PLUS Qseven module family which was designed to support applications with restricted budgets but also to be offered with the new Freescale i.MX 6QuadPlus and 6DualPlus processors with increased performance compared to the predecessors.

News ID 3519

Acceed: PoE injector provides power for end devices

End devices in data networks, for example cameras, barcode scanners or sensors must be provided with current. For this purpose, either an electricity source is necessary at every end device location or switches which support PoE (Power over Ethernet). A PoE injector such as the INJ-102GT from Acceed offers a good value alternative to this. Existing switches need not be replaced, separate electrical wires are redundant and the PoE injector can be flexibly adapted, also to changing requirements, precisely to the data link where it is needed.

News ID 3503

Lanner: highly-integrated 3U rail system

Lanner introduces its first highly-integrated 3U rail systemLVR-8300, packing high-processing CPU, M12 PoE ports, EN50155 certified endurance and multiple modular expansions to operate as the brain of intelligent rail systems. To handle complicated rolling stock tasks, LVR-8300 is built with a high-processing 4th Generation Intel Core i5 4422E CPU (Haswell). The CPU is able to handle multiple data transmissions and control the flow of information like the brain of an efficient rail system.

News ID 3513

Building application-ready intelligence platforms for multiple vertical markets

Interview with Jim Liu, Founder and CEO of ADLINK

ADLINK Technology is celebrating its 20th anniversary. Boards & Solutions talked with ADLINK Founder and CEO, Jim Liu, about his visions for the industrial computing market and the future strategy of his company.

■ This year, ADLINK Technology is celebrating its 20th anniversary. The company opened its doors in August, 1995, in Taipei with the goal of advancing technologies in the fields of test and measurement (T&M), applied computing, and automation.

Over the past 20 years, ADLINK has evolved from a T&M instrument supplier to a leading provider of robust, reliable solutions in industrial automation, healthcare, defence, transportation, communications, and infotainment, while consistently growing its market share in T&M. Recently, the company entered into an agreement with Keysight (Electronic measurement division spin-off from Agilent Technologies) to increase collaboration and investment, an arrangement which has been integral in the creation of five new technology labs for in-house product validation and verification. In addition, the company has risen in the Intel IoT Solutions Alliance to become a Premier member, one of only five in the Alliance.

Since 1995, ADLINK has expanded to 11 locations worldwide, employing more than 1600 people at local development centres in each major region that it serves, including EMEA, the Americas, China, and Asia Pacific. Moreover, ADLINK has seen an average compound annual growth rate (CAGR) of 17% over the last decade, far surpassing those of its larger, more established competitors. Company focus has broadened from development of hardware building blocks to full-scale creation of application-ready intelligent platforms (ARIPs) and system-level solutions across embedded form factors and vertical markets. ADLINK has actively participated in the advancement of industry standards to help shape specifications inline with demands expressed by its customer base, including chairing or serving on committees for PICMG (incl. AdvancedTCA and COM Express), PC/104 Consortium, PXISA (PXI Systems Alliance), AXIe Consortium, SGeT (Standardization Group for Embedded Technologies), and ETSI (European Telecommunications Standards Institute) for Mobile Edge Computing.

Boards & Solutions Magazine talked with ADLINK founder and CEO Jim Liu, about his vision for the industrial computing market and future strategies at ADLINK.

B&S: Can you tell us something about the market position of your company today and about your business opportunities?

Jim Liu: Since its foundation in 1995, ADLINK has focused on the industrial computing field. About 3 or 4 years ago we realized the customers needed more than this and enhanced our business model to offer complete building blocks. So, we extend our business model beyond board level to the platform level, in which we leverage board level expertise and increase integration, to fulfil the needs of different vertical markets.

What is our goal? At ADLINK we focus on succeeding first in the most demanding high-end and mission critical vertical markets with extreme operational conditions, like military and aerospace. This is definitely one of our goals. As well, we're also examining markets requiring the highest quality and accuracy such as test & measurement, and automation.

"We want to succeed in demanding high-end and mission critical vertical markets."

B&S: You mentioned test & measurement and automation already. Which other market segments and application areas are of strategic importance for you today and tomorrow?

Jim Liu: The already mentioned vertical markets are characterized by low volume, such that we have to look at more demanding markets with higher volume, like medical or infotainment systems - especially for gaming - and also telecommunication. Why infotainment and gaming systems? Especially when building gaming machines can be quite challenging? Because it requires very long-term certification processes and robust security. If you actually look at gaming systems, they are essentially a multimedia systems, combining board computers, I/O, display, lighting, and other functions, all combined in a single box. This can easily become very complicated, actually making it is a difficult platform to realize. I've been told by many embedded computing vendors about gaming, while a very important market, is never an easy one.

So why would we choose it? At the moment the highly ruggedized T&M and automation markets demanding maximum accuracy are our focus. If you look at future business opportunities, more and more effort is being expended in digitizing everything, from medical to infotainment to high speed telecommunications which very soon will go to 5G. All of these areas require very robust systems. Recently we've been devoting a lot of our energy to high end power computing used in the field. This is what we call the edge server. Personally I believe that if you are going to need, in the future, a very, very high performance system, you have to advance more and more content from the back end (centre office), forward to the field, right to the edge. If you want to use that superior computing power to move that data to the edge, you need an effective server at the edge site. But the major challenge for the edge server provider is to build high computing power servers which can physically withstand the harsh environments encountered there. You need durability, the structural integrity to survive extremes of temperature, vibration, contaminants, moisture, and all the other environmental challenges these applications present. This is exactly what we address with ADLINK technologies. This is the direction in which we are heading.

B&S: You are mainly a hardware driven company, but now you are moving into the direction of providing more complete solutions for vertical markets. I guess, that means you have to invest more in software and not just in hardware.

Jim Liu: Yes, but I have to clarify that. We have no intention of doing business on the system software or application software level. We have a clearly-defined line which we never cross, nor even approach, and that's the business domain of our customers. Even so, what kinds of utilities do we need to develop and invest in to fully support our customers? There are two important areas here. The first is what we call intelligence, meaning that most of our computers and platforms are installed in ways to which users do not have direct access. This enables our products to deliver effective diagnosis, improving reliability and consistency. The monitoring and diagnostics are the most important functions. We call this remote measurement software, and it's critical for our customers so they can take full advantage to connect to the internet and the back-office, all from the remote side. This means they can immediately monitor the status of this machine or that controller. This is one of software area in which we're invested.

The other is the more general mobile device management (MDM) field of applications, well known in the mobile device industry. Actually we're just now entering the area of deeply embedded controllers. We write the firmware to monitor, for example, the CPU temperature, memory, or hard disk, to report the status. This is another software-based benefit we offer to our customers. It's set up

Sharing the same business philosophy

They've known and valued each other for many years: ADLINK Founder & CEO Jim Liu and Kenneth Ragnvaldsen, CEO of Data Respons – one of ADLINK's Top 3 customers. "We share the same business philosophy, says Kenneth Ragnvaldsen. "Our partnership is characterized by long term commitment, deep trust and investment from both sides. We are both solution-oriented. Data Respons is driven by the mission to provide better solutions to our customers - rather than just delivering building blocks. And ADLINK is supporting us to realize these solutions."

Data Respons is a full-service, independent technology company and a major player in the embedded solutions market. Data Respons provides products, R&D services and embedded solutions at all levels of complexity to different customers in a wide range of market segments.

"…IoT is the intelligence of machines. "

to make it easy for them to write their own specific software applications on our platform. This is actually not as simple as purely writing software. They need to communicate with the hardware, including drivers and so on. We also have to prepare application-ready firmware that helps customers to concentrate on their own applications. Of course, we have to prepare application-ready firmware for different vertical markets, so customers can easily adapt their applications on top of our platform solution.

I'll give you an example: Sometimes we build the software by ourselves, and sometimes we leverage the ecosystems partners, such as Wind River. We can also cooperate with IoT software companies, even IBM. In any case, the key point is, we have to ensure that our hardware platform and the middleware can completely integrate into customer systems and is always fully compatible. These are the two areas of software development we concentrate on. This is in line with our new vision, what we call our Application-Ready Intelligence Platform (ARIP). I think most of people know ARP, but we added to it "intelligence", because it's becoming more and more critical, definitely a key point in the future of the IoT.

B&S: People in the industrial and embedded computing market talk a lot about the Internet-of-Things today. What is your view and ADLINK's strategy with the IoT?

Jim Liu: I will give you my interpretation of the Internet of Things. Why do I think IoT is so important for ADLINK? IoT is a concept to connect everything with the Internet. The connectivity is the fundamental, but what is the benefit for the customer of being connected? In our interpretation of IoT the Internet is the base, but the "I" means Intelligence. You have to map anything intelligently, whether it's a coffee machine, a vending machine, a gambling machine or a SMT machine. Every machine is going to become smarter, applying more intelligence inside. Machines can talk to each other, they can align themselves, they can work together and they don't need people to operate them. This is exactly the fundamental concept of Industry 4.0, in which machines can talk together, read the protocols, and work together.

If you want to realize the same intelligence in every machine what is the most important thing? First, you need experts who have the know-how to write the best software for intelligence. As the machines become more and more intelligent, there's a growing need for more powerful computer hardware for that complicated software. Who can build the best hardware for the IoT? ADLINK, we can, offering the customers the most intelligent machines for their requirements. How can ADLINK combine the most powerful intelligent platforms to fulfil our customers' IoT requirements? We believe that by emphasising that the "I" isn't so much the Internet, the connection, but rather, the most "Intelligent" platforms which can run software of the necessary complexity to fully realize the potential of the IoT.

I would like to emphasis more about the ruggedness of our systems, and also, high level of integration we have provided. We try to deliver a branding putting ADLINK on the Mercedes Benz level of image in the industrial computing market. ADLINK strives for industry recognition as the brand representing the highest quality and reliability in applied computing. For the future of IoT, as you know, we currently build industrial computers, but the future will see us building platforms intelligent enough to fulfil all the different requirements of vertical markets. This issue will be forced by the IoT, no matter whether we're talking about aerospace, telecommunications, or any other area of application. I would like to say that IoT is the Intelligence of machines.

B&S: In Europe ADLINK has shown a quietly aggressive acquisition strategy over the last couple of years. Will this continue?

Jim Liu: We are now nearly finished setting up product development and production capabilities in Asian sites in Taiwan and Mainland China in Shanghai. For future business, if you look at targeting the intelligence in IoT and where to find that intelligence, for the Industry 4.0 initiative, you have to take Germany into account as the global leader. Our European acquisition strategy has definitely focused on expanding our business, but not by acquisition alone. We are also seeking out companies with know-how in vertical market segments with whom we can cooperate. This is a kind of complementary collaboration, because we need their vertical know-how and expertise and they need our proven computing platform experience. Combining the vertical know-how and expertise with our infrastructure and design capabilities as a hardware manufacturer, the result is a complete solution to fulfil all our customers' requirements. I see this as a 100% win/win scenario.

As our first priority, we are looking in Germany for increased cooperation, no matter whether to combine companies or cooperate via ecosystem alliances. We are gaining more partners and increasing our infrastructure in Germany. I truly believe that success in Germany can be subsequently replicated or duplicated in Asia, especially in Korea, Japan, and also China. It definitely creates tremendous business opportunities for us by bringing different talents together and creating success together, we can also expand the business from Germany to other territories like North America. But what, you may ask, is the benefit for the partners? With acquisitions ADLINK never looks at growing revenues as the primary motivation. More important is to get talents. If we can more talent and smart employees to work together, then we are assured of ongoing success, irrespective of whether we are a Taiwan based company Germany-based company, because ADLINK will have become a global company or.

B&S: My last question: What do you see ADLINK being like when you celebrate your 25th anniversary?

Jim Liu: OK, I have set a goal for 2020. The most important thing is to provide shareholders and employees with a clear strategy and vision. We want to grow and be profitable, providing maximum benefit for shareholders and employees. We want to be a leading brand and the leading company in our market. For 2020 our target is to become a Billion Dollar company. Obviously, to grow our worth from actual $300M to $1B in only five years is tough, but we know that intelligent people can accept the challenge to reach the most aggressive goals. I always believe the most ADLINK employees are very excited to strive to reach this target. Key questions, however, are and will be, what continued benefits can we provide to our customers? As customers become more successful, we become more successful, and all of us, vendors and partners, can then enjoy the fruits of this success.

B&S: Thank you very much.

u-blox manufactures and supplies Cohda Wireless pioneer V2X module

u-blox announced a further cooperation with Cohda Wireless. To meet rapidly increasing demand for V2X modules for trials, early deployments and infrastructure roll-out, Cohda Wireless and u-blox have agreed on an exclusive license for the use of the latest MK5 module design, leveraging u-blox strengths in quality manufacture and global supply of automotive components for positioning and communications.

News ID 3506

Rutronik: new efus from F&S based on i.MX 6UltraLite ARM Cortex-A7 processor

The new efus A7UL from F&S is based on the Freescale i.MX 6UltraLite ARM Cortex-A7 processor. The efus form factor is designed according to "EasyLayout" guidelines. Therefore, the module is perfectly suited for applications with numerous interfaces in medicine and industry. The efus A7UL is available at distributor Rutronik as of now.

News ID 3501

Pentair: new design tools for Calmark Card Lok and Birtcher Wedge Lok products

Pentair announces its extended partnership with Traceparts to offer new design tools to support Calmark Card Lok and Birtcher Wedge Lok printed circuit board retention and conduction cooling products. These new tools include a part number configurator, which helps customers identify the correct Card or Wedge Lok part number for their application, and on-demand 2D and 3D CAD downloads.

News ID 3497

SGET prepares launch of new IoT workgroup

Within the SGET Standardization Group for Embedded Technologies a new workgroup is about to be established. The SDT.04 (Standard Development Team) workgroup will develop standards for the interaction of embedded computing systems within the Internet of Things, which is currently gaining momentum in the market.

News ID 3477

N.A.T.: DSP-based media acceleration engine as a plug-in AMC board

N.A.T. announced the NAMC-ODSP, a powerful new AdvancedMC module that enables telecom equipment and service providers to add video and audio acceleration to their AdvancedTCA and MicroTCA systems. The NAMC-ODSP combines a powerful Xilinx Kintex-7 FPGA with an array of up to eight Octasic OCT2224M DSPs, an on-board switch and advanced media gateway software.

News ID 3460

Round Solutions: GSM/UMTS/HSPA+ module with easy plug and play options

The R-UC864 module, designed by Round Solutions, allows the user easy plug and play options for UMTS/HSPA, CDMA and LTE. With plug and play options via the Telit Global Form Factor, the entire range of Telit xE910 modules are supported and optional features such as voice and GPS can easily be fulfilled without the need for re-work or re-design.

News ID 3476

MSC: COM Express starterkit for modules with BayTrail and Braswell processors

MSC presents the COM Express Starterkit MSC C6-SK-BT-EV-KIT001 for Type 6 modules based on the Intel Atom E3800 and related Celeron processors as well as modules equipped with the new Intel Celeron and Pentium N3000 processors. The Starterkit features the new COM Express Type 6 carrier board in the Mini-ITX form factor, two SO-DIMM memory modules, heat sink and suitable power supply.

News ID 3468

AAEON: optimize vehicular applications with latest 3.5" subcompact board

To further satisfy the increasing demand for in-vehicle computing capabilities, AAEON launches the latest 3.5" Subcompact Board: GENE-BT06. Being the newest entry into the company's family of subcompact boards, the focus of this new iteration has shifted from general industrial usage to applications in high shock/ high vibration environments, such as onboard vehicles and inside lifts. A series of specific design features have also been added to complement this shift.

News ID 3467

HEITEC: RiCase family now available as modular enclosure technology on rolls

HEITEC expands its RiCase housing range upon customers' request with enclosures for flexible, modular use and heavy loads. This line, suitable for 19 inch rack-mount as well as for the mounting of components, is meeting many market requirements for ultra-stable table-top and system enclosures.

News ID 3461

congatec presents first µQseven computer modules

congatec is extending its product portfolio for the most popular Qseven standard by now offering Computer-on-Modules in the 40 x 70 mm sub-credit-card µQseven format. The first flagship module of this next generation mini form factor is the conga-UMX6 with ARM Cortex A9-based Freescale i.MX 6 processors. It caters to applications in harsh environments, which require not only compact low-power designs, but also appealing multimedia and computing performance.

News ID 3466

MCU enables simple creation of EtherCAT applications

By Hairuo Qiu, Infineon Technologies

This article introduces the microcontroller XMC4800 which contains specialized functions and features to simplify EtherCAT applications. It is the first microcontroller with an integrated EtherCAT slave controller and analog/mixed signal IP using the Cortex M4 processor from ARM.

EtherCAT combines the highest demands on isochronous determinism, bandwidth, and interference immunity like no other real-time Ethernet protocol. In addition the EtherCAT development is stable, without any break: functions at the IP core are expanded, but always remain compatible with previous versions. Nevertheless, the market acceptance of EtherCAT is not comparable to that of other fieldbus systems such as CAN. The XMC4800 microcontroller may provide the foundation to change this. This is because it combines EtherCAT with lower implementation costs, higher product quality, long-term availability (until at least 2027) and a free of charge integrated development environment that is tailored to EtherCAT applications and the component itself.

Global digitization is making inroads into manufacturing and taking its toll in the form of vast amounts of data – measurement and control data from sensors and actuators, data for local and remote diagnosis, and data transferred from one machine to another. If automation technicians are consulted about communication at the machine and field level, they will report that EtherCAT is an established standard. On the other hand classic fieldbus systems such as Profibus and CAN are simply reaching their technical limits. They are not able to handle such large amounts of data because of the lack of bandwidth. And although it is not yet clear what development path Industry 4.0 will take, it is fairly safe to say that the amounts of data will not diminish.

Amazingly, real-time Ethernet systems have thus far failed to achieve universal acceptance. The manufacturers of drives, PLCs, and I/O modules have given various reasons for this. For Ethernet/IP – the Rockwell standard – many think that the lack of determinism is a limitation, permitting cycle times in the low single-digit microsecond range at best. The Siemens standard, Profinet, suffers similar limitations, at least in its RT design. The isochronous Profinet IRTon the other hand has the reputation of not being fully matured. It took years to finalize the current version, 2.3, interim versions are not compatible with each other, and it remains the problem whether version 2.3 will really be the final version. EtherCAT, on the other hand, has not been changed since 2004. The earliest devices communicate in the same network with the newest products despite all the new functions that have been added in the meantime. EtherCAT also achieves best isochronous determinism values ranging from the three-digit to the low two-digit nanosecond range. There is only one property that EtherCAT so far shares with Profinet and Ethernet/IP: relatively high procurement and maintenance costs, the latter throughout the entire product life cycle. So far this has been because there have been no related highly integrated circuits. That changes with the XMC4800 32-bit microcontroller. The XMC4800 is the first microcontroller with an integrated EtherCAT slave controller and analog/mixed signal IP that uses the Cortex M4 processor from ARM.

A comparison with established solutions based on TI Sitara, FPGA or ASIC shows how easy it is to implement EtherCAT with the XMC4800. The MCU requires no additional components such as external memory or quartz clock generator to start up the EtherCAT slave controller. An integrated PLL supplies the EtherCAT IP with the necessary 25-MHz clock. Code is executed from the ARM Cortex M4 processor at 144 MHz from the integrated RAM or flash memory. The reduced costs resulting from the reduced BOM are obvious. But external memory in particular creates something that is not always obvious at first glance: the difficult product maintenance during the whole product life cycle. Memory manufacturers optimize technologies for the PC and mobile computing, meaning that technology nodes becomes obsolete after five years at the latest and are not economical thereafter. The result is component obsolescence. This does not fit well with the life cycles of industrial systems, in which machine longevity of 15 years or

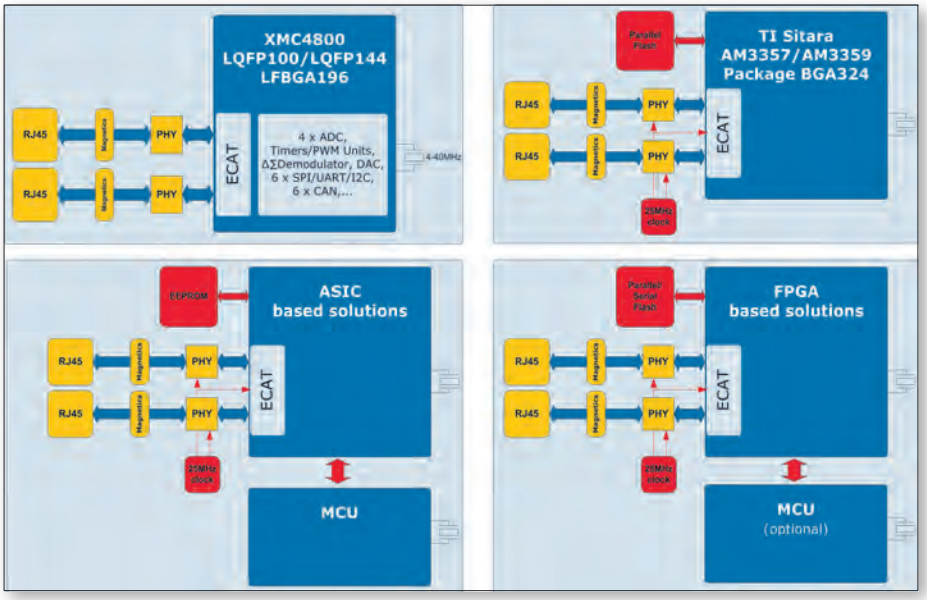

Figure 1. Overview of various implementations of EtherCAT. XMC4800 allows EtherCAT without additional memory, quartz clock pulse generator, or microcontrollers.

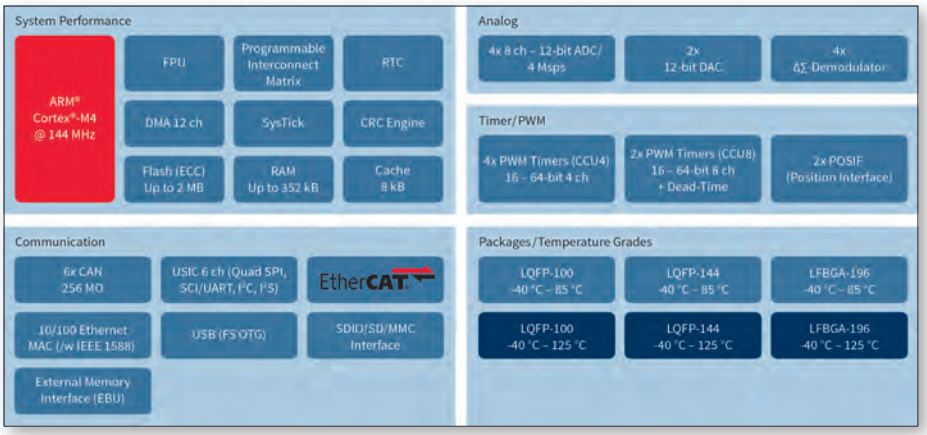

Figure 2. The XMC4800 represents the first EtherCAT node integrated into an ARM Cortex microcontroller with flash memory and analog/mixed-signal-IP specified for a temperature range of up to 125°C and AEC-Q100 qualification.

more is standard. Even "fit, form, function" programs, in which memory modules in new manufacturing technologies are based on old form factors and functions, are not immune to datasheet modifications and thus from requalification. The XMC4800 solves this problem, as do all devices from this microcontroller range, with guaranteed long-term availability – until 2027 at least (figure 1).

In addition to the EtherCAT slave controller, the XMC4800 has a number of integrated peripherals in order to completely cover various applications, as the block diagram shows (figure 2).

In addition to the ARM Cortex M4 processor mentioned already, the large flash memory of up to 2 MB, and the RAM of up to 352 KB, the XMC4800 places special emphasis on communication as well as actuators and sensors. No other Cortex-M-based component offers six CAN nodes in which 256 message objects can be organized into send/receive FIFOs, allowing communication to take place without interaction with the CPU. Even exchange between different CAN networks with different transmission rates takes place in gateway mode without involvement of the computing core. The XMC4800 offers an elegant solution for its implementation in mixed networks with CAN and EtherCAT, allowing a gateway from CAN to EtherCAT to be efficiently established through DMA transfers (figure 3).

There are also six serial interfaces (UART, SPI, dual and quad SPI, I2C, and I2S) which can be realized through the programmable USIC interface. There are also parallel interfaces (EBU) and USB and SDIO/SD/MMC interface for connecting a mass storage device. A regular TCP/IP Ethernet interface offers an

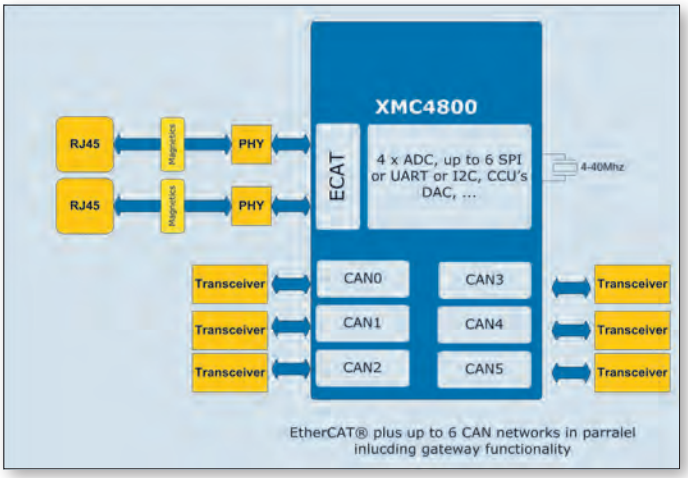

Figure 3. EtherCAT and CAN run simultaneously on the XMC4800 – even as a gateway – without dedicated EtherCAT-ASIC, external memory, or quartz clock pulse generator.

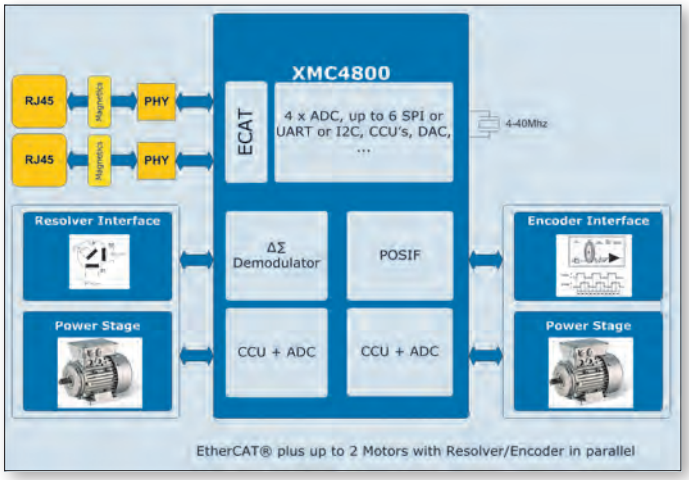

Figure 4. The XMC4800 allows a combination of up to two motors, including position detection and EtherCAT.

easy means of local or remote diagnostics and maintenance. Besides these communications interfaces, it is the integration with the analog and mixed-signal IP that makes the MCU unique. It is equipped with four 12-bit A/D converters, four delta-sigma demodulators, and two encoder interfaces on the sensor side. For actuators, it has two timer units for controlling two full bridges, four timer units for half-bridges, and two 12-bit D/A converters. This allows up to two motors, including position detection, to be controlled through resolver or encoder while EtherCAT communication is running simultaneously (figure 4).

The classic EtherCAT application is in factory automation. So far, the technology has not taken much hold in another area that also places great real-time demands on fieldbuses: construction machines, forklifts, and agricultural transport vehicles. That is not very surprising, since previous EtherCAT components have been unable to fulfil the necessary demands on quality and reliability. Much like in classic automobile construction, components must be able to operate in an expanded ambient temperature range of up to 125°C and need an AEC-Q100 qualification to verify reliability. The XMC4800 is the first EtherCAT component that fulfils these requirements. But there is one difference between these areas and automobile construction: the XMC4800 has no PPAP (Production Part Approval Process), meaning that it is not intended for use in passenger vehicles. The microcontroller family currently consists of a total of 18 devices that vary in memory size (from 1 MB flash and 200 kB RAM to 2 MB flash and 352 kB RAM), package variant (LQFP100, LQFP144, and LFBGA196), and temperature range (up to 85°C and up to125 °C). All components are code compatible with all XMC4000 microcontrollers and pin compatible with the respective packages. Infineon offers both a development board, the XMC4800 Relax EtherCAT Kit, and suitable software development tools for immediate EtherCAT node setup. The XMC4800 Relax EtherCAT Kit is equipped with a XMC4800 in an LQFP144 package and an on-board debugger, regular Ethernet interface, CAN nodes, USB, and an SD/MMC card reader.

The kit can be purchased from Infineon distributors or from the XMC Kit website. For software development, Infineon offers the DAVE development environment with libraries for low-level drives and apps free of charge. For EtherCAT, DAVE uses SSC (Slave Stack Code) from Beckhoff. In addition to the free development environment, commercial EtherCAT slave stacks are on offer from established third-party manufacturers. ■

Product News

■ IntervalZero to exhibit at SPS IPC Drives 2015

IntervalZero will be exhibiting at SPS IPC Drives 2015 in Nuremberg. The topics of SPS IPC Drives' conference were divided and reach from classic automation up to new fields of application as infrastructure, logistics or mobile machines. By leveraging x86 multi-core technologies and symmetric multiprocessing functionality, and by extending Windows with the RTX real-time extension, OEMs can replace real-time hardware, such as DSPs and FPGAs, with standard Windows PCs to reduce costs, and boost quality and performance.

■ Advantech: economical all-in-one touch computers for industrial and commercial

Advantech announce UTC-315E/318E – a multifunctional interactive self-service terminal powered by a fourth-generation Intel Core i5-4300U processor, equipped with up to 8 GB of memory, and featuring a stunning TFT LCD 16:9 display. Precision engineered to support a wide input voltage range (12 to 30 V) for overvoltage protection and rugged reliability, UTC-315E/318E provides an all-in-one computing system aimed at markets that demand cost-effective high computing performance solutions.

News ID 3593

■ MEN: doubled storage on 3U CompactPCI serial

The hard disk carrier board G503 for the first time unites two HDDs or SSDs on just one single 3U CompactPCI Serial card and fulfills the requirements for growing data volumes also in harsh environments. Designed to work in an x86 system environment the G503 offers space for two 2.5" SATA HDDs or SSDs. It delivers as much as four terabytes storage capacity on just one slot based on the robust and compact Eurocard form factor.

News ID 3565

■ ADLINK: all-in-one embedded Box PCs for infotainment

ADLINK introduced a new Industrial PC product line with specialized features for retail and gaming applications. The new line is initially being launched with two highly integrated box-PC models including the necessary interfaces for most common peripheral devices in addition to the intelligent API middleware simplifying application development. The API middleware allows application development without dependencies to the peripheral devices, a vast library of commonly used peripherals is available.

News ID 3553

AAEON: compact embedded PC with quad core CPU

For embedded PCs, it is more about capabilities than appearance. AAEON accomplishes this with the brand new BOXER-6404, which is one of the smallest, most compact embedded PCs on the market, measuring 166 x 106.6 x 30 mm. Within its humbly-designed enclosure packs a quad core CPU, the Intel Celeron J1900, providing adequate computing power capabilities, such as dual display via the system's two HDMI ports, a simple network appliance through the system's 4 LAN ports with both dual host and LAN redundancies.

News ID 3550

Acceed: fanless controller for machine vision and video controlling

Demanding machine vision and video monitoring applications are based on the recording, transfer, evaluation and saving of video data. Modern video systems work with megapixel cameras which carry large quantities of data into the system. Naturally, this data volume requires a wide bandwidth, top processor performance as well as a high degree of security and flexibility in memory management.

News ID 3504

Axiomtek: fanless quad-core, wide temperature Pico-ITX motherboard

Axiomtek announced the arrival of the PICO842, an extreme-compact fanless Pico-ITX motherboard designed to support the Intel Celeron processors quad-core J1900 and dual-core N2807. Its system memory supports up to 8GB of DDR3L. The extreme compact-size fanless embedded board supports dual display outputs through HDMI or VGA, and 18/24-bit single/dual channel LVDS.

News ID 3502

congatec: COM Express compact modules support up to three displays and 4k

congatec announced the introduction of conga-TCA4, the company's first COM Express compact module based on the new Intel Pentium and Celeron processors. Based on this new premium class low-power design, the robust COM Express modules consume on average just 4 watts while providing increased graphics capabilities and overall performance. Up to 16 graphics execution units can support up to three HD displays or two 4k displays and achieve a theoretical peak performance of 358.4 GFlops per second.

News ID 3493

Neousys: box PC featuring Bay Trail J1900 and multiple expansion slots

Neousys Technology announced its new generation multiple expansion slots box PC Nuvo-2400, featuring Intel Bay Trail J1900 processor, front accessible I/O and the fanless design. The Nuvo-2400 Series is ideal solution for toll collection and intelligent parcel system applications. The fanless design of wide operating temperature from -25 to 70°C enables system integrators to build up the solution with Nuvo-2400 in a wide range of environment.

News ID 3471

EKF: CompactPCI Serial CPU with 5th gen Intel Core processor

EKF introduces the SC3-LARGO, a rich featured high performance CompactPCI Serial CPU board, equipped with a 5th generation Intel Core processor. The powerful quad core CPU contains in addition an advanced graphics controller. The SC3-LARGO 4HP front panel is provided with two Gigabit Ethernet jacks, two USB 3.0 receptacles, and two mDP connectors (DisplayPort 1.2 MST, 4k UHD).

News ID 3462

Meeting the integration challenge in programmable logic controllers

By Suhel Dhanani, Maxim Integrated

Industry 4.0 is fundamentally transforming what it takes to win in the PLC market. Smaller form factors, higher I/O density, and advanced capabilities - success today demands new strategies for managing competing demands for more functions in less space.

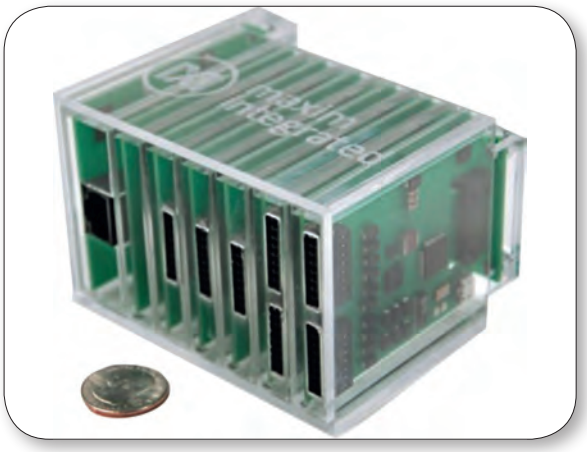

Figure 1. Maxim Micro PLC Reference Design shows how much space can be saved when engineers take advantage of the latest advances in analog integration.

For equipment OEMs, Industry 4.0 represents a massive opportunity. The number of sensors used to track environmental and process variables continues to increase. This is accelerating the transition to distributed-control architecture, where plant operators reduce bottlenecks and shorten control loops by moving programmable logic controllers (PLCs) closer to the processes that they control. Ultimately, the promise of improved operational efficiencies and yields will lead to the largest overhaul of plant operations since the invention of the PLC. This poses a considerable challenge for PLC engineers.

To win in this market, system designers will need to pack more I/Os and more functionality into enclosures that keep shrinking. The problem is that there is relatively little space to be gained from digital scaling of the microprocessor. Nowadays in advanced PLC modules, analog and passive components consume approximately 85% of board space. Engineers can no longer afford to ignore the obvious problem on their boards. Many of the analog and discrete components that have worked so well in previous systems are simply too big for micro PLCs and embedded controllers. The promise of Industry 4.0 will only be realized through greater levels of integration, across the PLC system design. PLCs have been at the nexus of industrial transformation ever since the introduction of the Modicon 084 in 1969. Thanks to the digital revolution, they have become progressively more powerful over the years, capable of handling more inputs, larger words, and more complex instruction sets. Today, innovations in analog and sensor technology are helping manufacturers take full advantage of the massive compute resources available, both within the factory and in the cloud. Industry 4.0 represents a vision for what's possible when you combine this intelligence with pervasive sensing, distributed control, and robust, seamless connectivity. And once again, the PLC finds itself at the center of a revolution. This is creating new business opportunities for PLC OEMs, as manufacturers increase capital expenditures to take advantage of these technologies. However, it also raises a variety of challenges for system designers.

Thanks to the steady march of Moore's Law, we now have massive amounts of processing power at our disposal. This processing power enables enterprises to crunch terabytes or even petabytes of data to enhance decision making, generate new insights, and optimize processes. For manufacturers, the biggest challenge is collecting and acting on this data. Three technology trends have emerged to address this problem. Pervasive sensing: the cost of sensors and their interfaces continues to decline, enabling manufacturers to track more variables and types of data. Distributed control: moving process controllers closer to the machines that they control eliminates bottlenecks and improves manufacturing throughput and flexibility. Seamless connectivity: manufacturers are connecting the factory floor to the enterprise network to unlock the potential of big data and analytics. This brings numerous benefits, but it also raises many security issues at the system level.

The biggest problem in PLCs is the one that no one sees. A recent market study revealed that most engineers still believe that digital technology offers the best opportunity for space savings. Yet, digital chips consume just 15% to 20% of the board space in PLC modules. The real problem is the amount of PCB devoted to analog and discrete components. These devices consume as much as 85% of available board space in PLC modules, but they do not scale like digital chips. So PLCs now need greater levels of integration to conserve PCB space while delivering the required functionality.

Solving this PCB space problem requires a new approach to analog design. Gone are the days when system designers could just select catalog parts with adequate specs and then perform heroic feats in layout to make them fit the PLC enclosure. Today the market requires

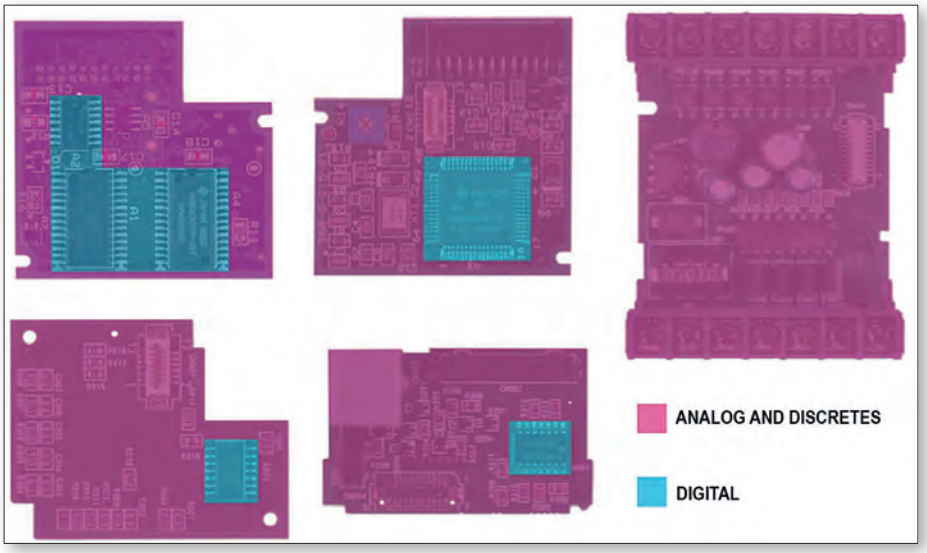

Figure 2. In this typical Micro PLC, analog and discrete components take up more than 80% of the board space.

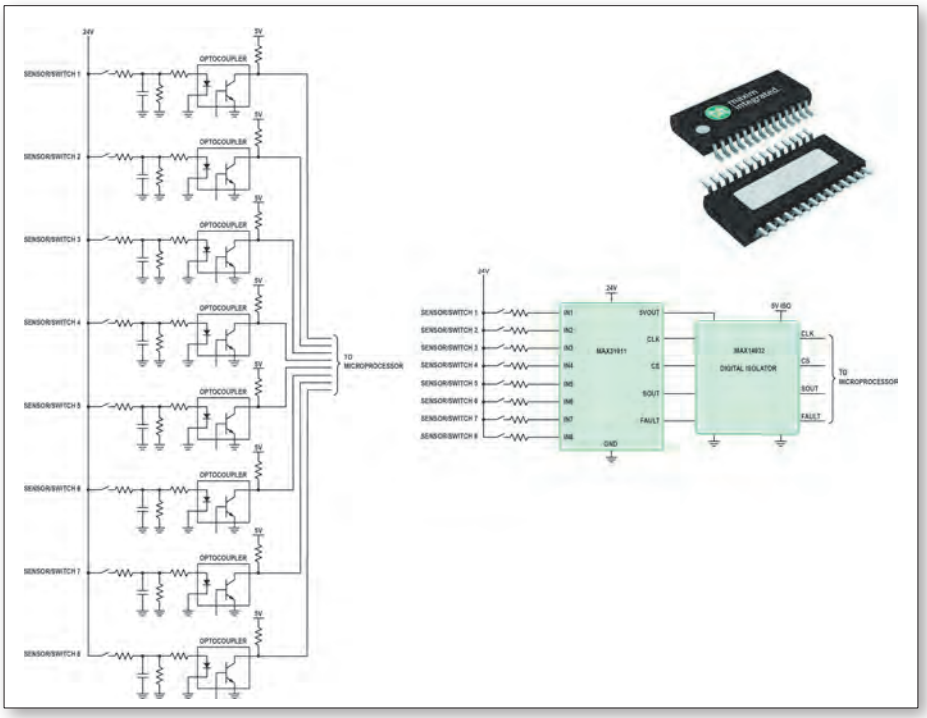

Figure 3. The MAX31911 greatly reduces the number of optocouplers for digital-input designs.

a step-function improvement in space and energy efficiency. To be successful designers will need to systematically look for opportunities to streamline analog circuitry and reduce power dissipation. Fortunately, new solutions are being developed by companies, such as Maxim Integrated, who are looking to capitalize on their integration capabilities as the industrial market evolves. Combining multiple discrete analog functions in a single IC can provide system designers with significant advantages in size, power consumption, and cost. Maxim Micro-PLC Technology Demonstration Platform shows how analog integration can enable a 10x smaller PLC footprint, 50% cooler operation, and 70x faster throughput for digital I/O. These achievements are realized using the Maxim Smart Integration approach to product development and its proprietary process technology.

I/Os are the essential link between PLCs and the countless sensors and actuators required by Industry 4.0. As manufacturers add more sensors across factory floors, equipment designers must push channel density ever higher, even as available space in the PLC continues to shrink. The I/O isolation architecture offers an opportunity for significant space savings. The traditional approach is to use one optocoupler per channel, and connect each optocoupler output to a digital input on

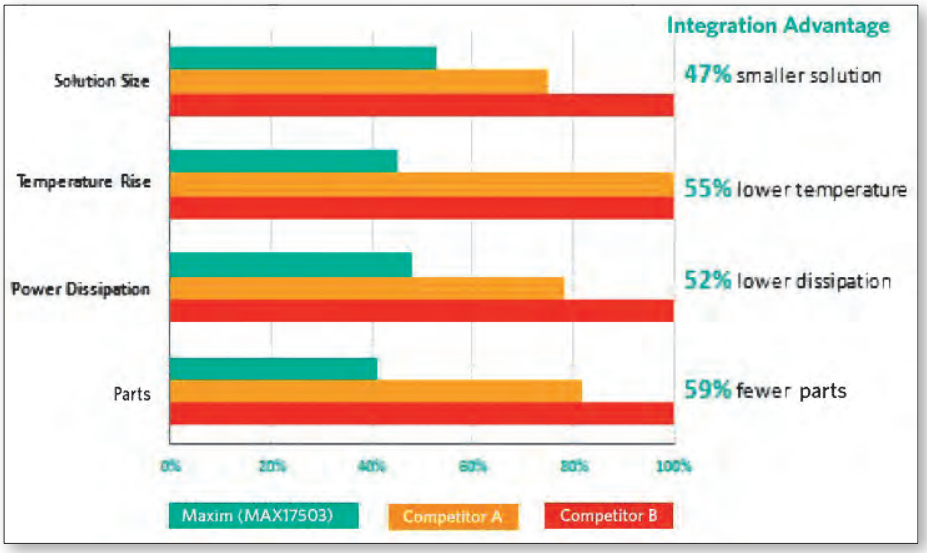

Figure 4. 60V synchronously rectified Maxim DC-DCs like the MAX17503 greatly reduce heat, size, and component count.

the microcontroller. This approach is costly in parts count, board space, and use of digital I/O pins. Today, multichannel serializers like the MAX31911 can translate, condition, and serialize the 24V digital outputs of sensors and switches to the 5V, CMOS-compatible levels required by PLC microcontrollers. This approach reduces the necessary number of isolated channels to just three. The MAX31911, for example, is an 8-channel industrial interface that supports SPI daisy chaining; larger numbers of inputs from multiple serializers can share the same three isolated signals. It enables dramatic savings in power dissipation, parts count, overall PCB real-estate footprint, optocouplers, and cost for a 32-channel implementation.

Higher I/O density and smaller form factors also add to the design challenge in another basic way, a consequence of the inevitable power dissipation. The system must be more power efficient than ever to keep the PLC from overheating, especially in an application where fans and vents are generally not acceptable. An often overlooked source of heat in PLCs is I2R losses in the DC power-distribution feeds. Frequently, 24V is used for PLC backplanes, while 12V is used for on-board distribution. A better approach is to use 48V across the board, as this reduces currents by a factor of 4 and, correspondingly, PCB copper losses by a factor of 16. Using high-voltage point-of-load (POL) DC-DC converters like the MAX17503 eliminates the need for an intermediate DC-DC conversion stage. These converters operate directly with up to 60V inputs to enable single-stage conversion for digital, analog, and mixed-signal loads at low voltage. The converters free valuable board space while avoiding the cost and energy losses of the interstitial stage. Additionally, they minimize copper losses, reduce connector contact current ratings, increase reliability, and maintain cool operation (typically 50% cooler) due to their synchronous switch architecture.

Today signal-conditioning, processing, and communication circuits require a diverse set of power rails, often differing by a few volts or only fractions of a volt. This exacerbates an already complex electrical environment. Add to this, the increasingly sophisticated methods of energy savings through various power-control methods and the cost and complexity of power subsystems only increase further. The Beyond-the-Rails-products from Maxim simplify the signal chain, enabling a design that allows ±10V bipolar inputs to be multiplexed, amplified, filtered, and digitized, all with a single 5V supply. This approach eliminates the need for additional ±15V power supplies, thus reducing component count, system cost, power dissipation, and footprint.

When factory networks were closed to the outside, IT security issues usually involved rogue employees and internal data theft. Those good old days are gone and not coming back. Today Internet-connected PLCs must be protected against multiple threats, including hackers, malware, and viruses. System-level software provides an initial level of protection, but in many cases this is not enough. Hardware-based security is needed to protect against the following threats. Cloned or counterfeit components: Counterfeit field sensors and I/O modules pose a real threat to your bottom line. But there is a bigger danger: counterfeit field sensors could be used to execute an attack on the industrial environment. Using a secure authentication IC is the only way to guarantee that you can trust the sensor readings sent from critical components to the PLC.

Malware injection: Stuxnet was a wake-up call to industry. System operators must ensure that all equipment upon which a supervisory control and data acquisition (SCADA) or distributed control system (DCS) is built runs genuine software. Secure boot and secure update management are the best ways to protect a device from malware injection. A secure coprocessor can be used to implement an encryption design that fully addresses these issues with minimal design-in effort.

Eavesdropping: As concern over industrial espionage increases, manufacturers must ensure that unauthorized users cannot steal trade secrets off industrial networks. Encryption and authentication ICs can protect against such eavesdropping, and go further with active tamper detection to prevent brute-force attacks on the hardware components.

Maxim has a rich history in hardware security implementation for ATMs, point-of-sale (POS) systems, and consumables such as printer cartridges. The security product portfolio ranges from simple authentication engines to complex, secure microcontrollers that implement advanced standards-based encryption algorithms.

Industry 4.0 is fundamentally transforming what it takes to win in the PLC market. Smaller form factors, higher I/O density, and advanced capabilities - success today demands new strategies for managing competing demands for more functions in less space. This problem will not be solved by Moore's law. The large amount of analog content in these systems means that PLC engineers can no longer ignore the integration problem in front of them. Not when success depends on how much functionality you can pack into every centimeter of space. Engineers who systematically seek higher levels of component integration will be well positioned as manufacturers pursue the benefits promised by Industry 4.0. ■

Future-proof your display in embedded industrial applications

By David Parsons, Consultant to Renesas Electronics

This paper examines the key factors affecting the lifetime of graphic LCD displays, to help designers reach the right conclusion and make decisions suited to particular circumstances and needs. The question is: can an LCD panel last the lifetime of the equipment? If you select carefully the answer can certainly be yes!

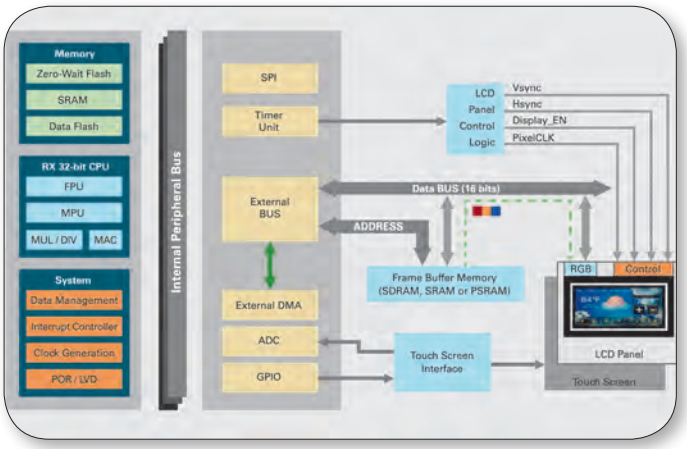

Figure 1. LCD direct drive block diagram

■ Choosing a display for a consumer application such as a smart phone carries little risk for the designer from a lifetime perspective, as the phone often drives sufficient volume to justify dedicated production or even a custom display. A new year heralds a new model with a new display and last year's model is quickly discontinued, leaving the unlucky industrial designer with the challenge of finding a replacement and updating their design in weeks... rather than investing their resources in creating new value. Many industrial applications need to last for many years in production, but can an industrial display last for the production life of the equipment? In many cases this can be 10 or even 20 years! Is it possible for a display to be available for such a long period?

Some areas require careful design consideration and should allow for a degree of maintenance or rework without major redesign of the equipment or front panel. These include the degradation of the backlight, touchscreen or simply the phase-out of the panel itself, so the designer needs to consider the following: mitigation against the risk of panel obsolescence, mechanical mounting of the display, backlight technology and its inherent lifetime, touchscreen lifetime (if used), operating temperature range, and methods of driving the display.

Industrial graphic displays can easily operate for more than 10 years. However typical manufacturing lifetimes for the display can be as little as a few years, depending on the manufacturer and intended end use. It should also be remembered that the rules of supply and demand apply not only to the LCD manufacturer, but also the suppliers of all the components that make a display panel. Careful selection is needed.

Monochrome STN displays are still used in many industrial applications and offer low cost, small panel sizes ranging from 1" to around 10", with resolutions up to VGA (640 x 480 pixels). They are available in reflective, transmissive and transflective formats and a wide range of screen shapes. Colour TFT panels tend to be used in consumer applications and are exposed much more to risk of discontinuation. Sizes range from typically 3.5" to 19" with resolutions up to full HD (1920 x 1080) with standard and wide format options. Popular sizes are the smaller 5" or 6.5" displays which offer a good combination of graphics, brightness and cost, whilst industries such as factory automation favour larger 10.4" to 15.6" TFT displays that can provide higher levels of information and animation. The useful operating life of an LCD panel is usually determined by the backlight. Most manufacturers nowadays employ long lasting, low power LED backlight technology to give better brightness, readability and longer life. These backlights have operating lives typically around 100,000 hours (backlight operating life is usually characterized to 50% maximum brightness). The backlight is also often replaceable, thus increasing the life of the panel.

Every panel has to be driven and there are a number of different possibilities depending on the resolution. Lower resolution panels up to around WQVGA (480 x 272 pixels) can be driven directly from some MCUs without the need for an external controller. Panels that have CMOS or TTL interfaces generally do not require any additional signal drivers, however low voltage interfaces such as LVDS (Low Voltage Differential Signalling) will require specific interface drivers between the MCU and the panel. Figure 1 shows a typical direct RGB panel interface with interfaces to the LCD panel and frame buffer memory. Examples of direct MCU to LCD interface and a LVDS equivalent are shown in figures 2 and 3.

Larger resolution panels will require either a dedicated graphics controller IC or a graphics control board as the MCU alone cannot provide the high speed signals required. Interfaces to graphics controller ICs typically use the MCU external peripheral bus dedicated

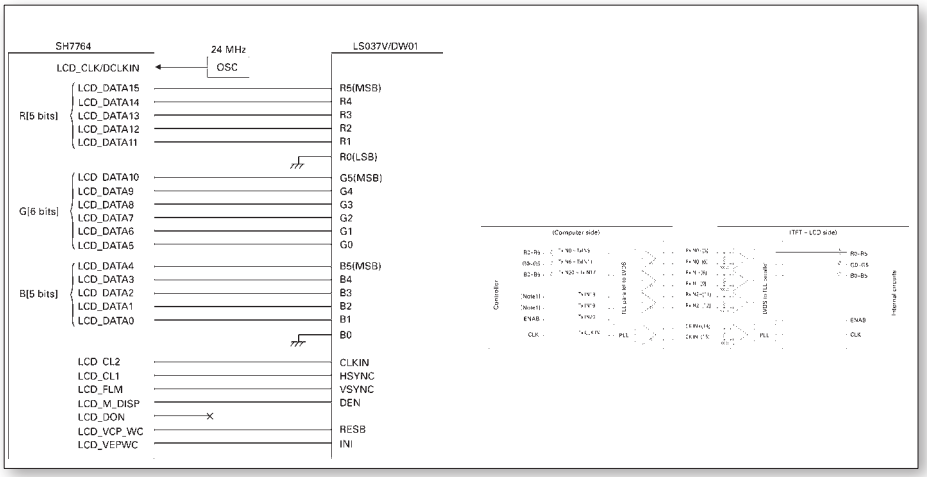

Figure 2. MCU LCD direct interface

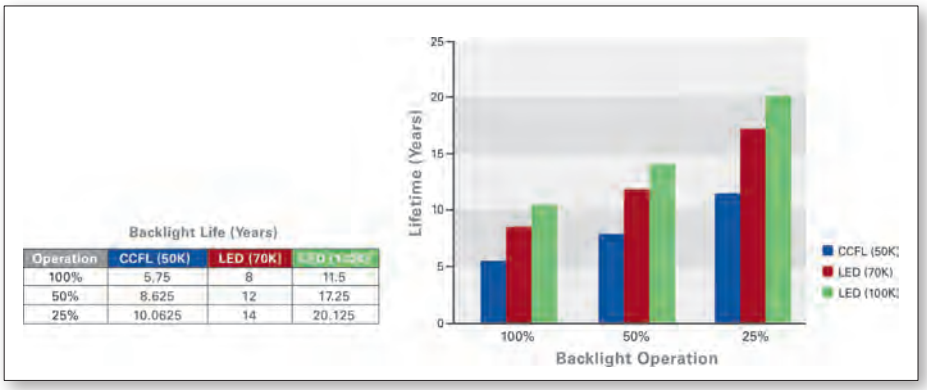

Figure 4. Backlight operating life

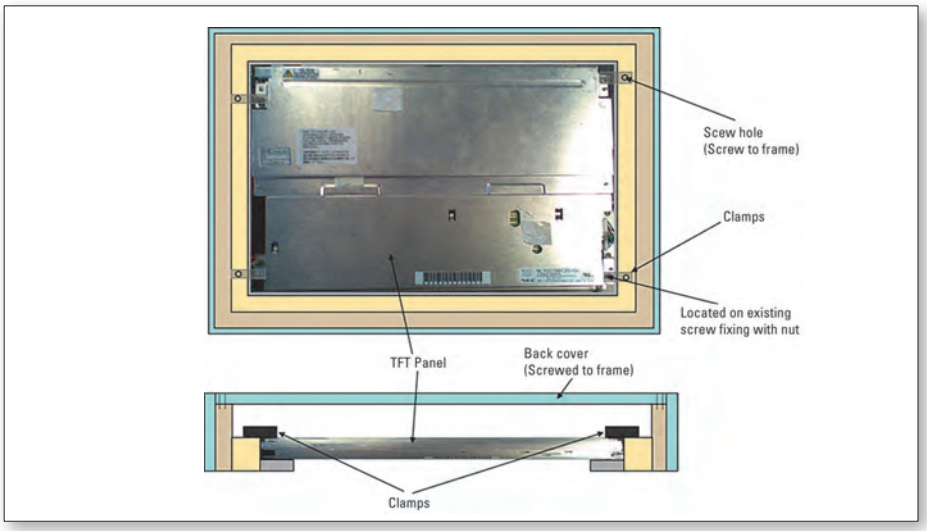

Figure 5. Panel mounting example

for driving the LCD panel. Graphic control boards offer a variety of interfaces including USB and Ethernet. It should be remembered that all of these components can be affected by obsolescence, causing a redesign of the system and should be considered carefully by the designer so that it is as flexible as possible.

The backlight is fundamental to the longevity of the panel, all having a finite lifetime dependent on their total operating time, which can vary dramatically depending on the application. Table 1 shows the standard operating lifetimes of current backlight technologies and the equivalent time in years of 100% usage. (Times are measured to 50% brightness).

In practice there will be periods when the equipment may not be operating such as maintenance, holidays and weekends, which is of course dependent on the application and industry. Some industries operate almost 100% of the time, for example a factory when the system may only be turned off during the maintenance downtime. Maintenance downtime however does not have a big impact, adding only around 336 hours life, assuming a shutdown of once per year for two weeks. However you can see from table 1 that by careful selection the operating life of the panel can be achieved without necessarily having to do anything special, but what if the backlight is dimmed or switched off during periods of inactivity, what is the impact on the life of the panel? Let's compare a scenario of operating the backlight for 100%, 50% and 25% of the time.

It is clear from figure 4, that dimming or switching off the backlight or even the whole panel can save power but deliver a lifetime that could suit many industrial applications and utilizing the latest LED technology, a 20 year life is possible. Applications that say only operate during the working week would require a total 124,000 hour life if operated 100% of the time. When factoring in the effects of dimming, switching off the backlight or powering off the whole panel, achieving the required life is definitely possible especially as both CCFL and LED backlights are usually replaceable providing an additional level of security against failure.

It is not the intention here to discuss the respective merits of touch technologies, but to consider touchscreen endurance and its effects on the lifetimes of the panels. The most common types used today in industrial panels are 5-wire resistive and Projected Capacitive Technology (PCT), offering good touch sensitivity, interface options and they can be supplied as an add-on unit or factory-installed by the manufacturer. The use of a touchscreen of any type will decrease the luminance of the panel by up to 20% for resistive and 10 to 15% for PCT, which may result in using a higher level on the backlight decreasing its operating life. Resistive panels tend to be made using a softer surface material resulting in lower impact and scratch resistance and an endurance of around 3 million touches. Linearity and drift can be a problem that could require recalibration and interfaces can be direct analog or serial (RS232, USB) via an integrated touch controller device. Projected Capacitance Technology panels are generally made of a harder material offering better impact and scratch resistance and a virtually unlimited touch endurance. Linearity and drift are non-existent requiring no recalibration. Interfaces are generally RS232 or USB supplied by the capacitive touch controller.

Touchscreen endurance is difficult to answer as the question: how many touches are made per day? will vary from application to application. Both resistive and PCT are designed to

last the lifetime of the panel, but PCT looks to offer the best solution as there are no limitations on the lifetimes of the touchscreen. Fitting a touchscreen is not a simple task and should ideally be handled by the manufacturer or specialist to ensure good alignment and bonding to the display. Replacing a touchscreen is in many cases difficult or not possible resulting in a replacement of the complete panel. Obviously the use of a touchscreen is an option where in some applications the control functions could be implemented on a separate touch or control panel, or are not required at all, so that any longevity concerns of using a touchscreen are removed.

Mounting or changing a display panel can be difficult as manufacturers do not offer compatibility even for panels of the same size. One suggestion could be to mount the panel on a secondary bezel or plate as this can be changed to accommodate the fixing of an alternate display while assembly to the front panel remains the same. Figure 5 shows an example of mounting a 10.4" TFT panel in an external plinth. It should be noted that this was designed to be external and hinged at the bottom, but the principle allows the panel to be replaced easily in case of a failure. If longest life is required then this is to be highly recommended as it leaves the design protected from the vagaries of product discontinuation and changes in technology.

With panel production lives up to seven years at best, the availability falls short of some equipment life requirements. All major manufacturers will offer an obsolescence policy with notice and last time buys of between one and two years. This allows the user time to purchase a number of panels and time to plan changes to another panel or manufacturer. In some cases this could provide the user with enough product to support up to the equipment end of life depending on where the equipment is in its life cycle. The use of technology that is designed for consumer markets while being very attractive and utilizing the latest technologies should be avoided for any application requiring a long lifetime. The product life of this type of display can be as little as a year. ■

Product News

■ Sierra Wireless: modules enable cellular connectivity in smart meters

Sierra Wireless announced that Iskraemeco has selected Sierra Wireless AirPrime HL Series embedded modules to enable cellular connectivity in smart metering deployments worldwide. Modules within the HL Series for 2G and 3G networks were selected as part of the introduction of next generation smart electricity meters, as well as for a smart metering project which will begin deploying across the Netherlands beginning of next year.

News ID 3599

■ Toshiba: SLC NAND flash memory for embedded applications

Toshiba Electronics Europe has launched a new line-up of 24nm SLC NAND flash memory products for embedded applications that are compatible with the widely used Serial Peripheral Interface. Wide ranging applications for the new Serial Interface NAND include consumer applications such as flat-screen TVs, printers, wearable devices, and industrial applications including industrial robots.

News ID 3583

■ ERNI Electronics expands IDC terminal portfolio

ERNI Electronics expands its offering on IDC terminals. New variants for stranded wires (AWG24/7 and AWG26/7) are added to the existing offering for sold wires AWG24/1 and AWG22/7 (stranded wires). Wires with a maximum diameter of 1.1 mm (incl. isolation) can be handled. The new introduced IDC terminals and the already available AWG22 variants are also now available with new colors like natural, red, green and black.

News ID 3578

■ TI innovations at SPS IPC Drives 2015

Texas Instruments will demonstrate its latest analog and embedded processing solutions at SPS IPC Drives 2015. TI will be unveiling innovations to ease design challenges for today's developers and highlight key technology advancements across the industrial market, including programmable logic control (PLC) and sensor transmitters, motor drives and industrial communication solutions.

News ID 3574

■ Mouser now shipping NXP PN7120 NFC controller

Mouser is now stocking the PN7120 NFC controller from NXP Semi-conductors. The highly integrated PN7120 provides a plug-and-play, full NFC solution for easy integration into any OS environment. The PN7120 helps create innovative 13.56 MHz NFC solutions and enables fast exploration of new applications and use cases for Internet-of-Things, including a variety of appliances and consumer electronics such as home network gateways and routers, set-top-boxes, audio de-vices, printers, and gaming consoles.

News ID 3559

Controlling graphics without a controller

By Adam Folts, Microchip

This article shows how a low-cost controllerless graphics system can be implemented with microcontroller peripherals to create a virtual graphics controller using only a small amount of CPU time.

One of the popular ways of creating graphical embedded applications is to add an internal or external graphics controller. The problem is that this adds cost and can make designs unnecessarily complex, and in most cases for a simple graphical user interface such controllers are not needed. An alternative is to use microcontroller peripherals to create a virtual graphics controller for graphics rendering without taking up large amounts of CPU time, in fact it can be less than five per cent.

In general, a controllerless graphics system needs to send a frame of pixel information to a display glass at a certain rate. This refresh rate is usually around 60Hz. To do this, the system must constantly send frame data to the LCD panel. At first, it seems like this task would take up most of the CPU time in an MCU. However, this is not the case for microcontrollers, such as Microchip PIC32 MCUs, that contain a direct memory access (DMA) peripheral for data transfer. With a DMA transferring the pixel data, less than five per cent of CPU time can be used to achieve a virtual graphics controller.

The DMA peripheral can transfer data from one location to another without CPU intervention. In a controllerless graphics method, the DMA can be set up to transfer one line of frame data at a time through the parallel master port (PMP). Each line consists of many pixels. The DMA would send a portion of the frame buffer during one transfer. A PMP or timer interrupt request would then trigger the next DMA transfer until a line is transferred. In devices with non-persistent interrupts, a timer can be used as the DMA trigger source. For devices with an external bus interface (EBI), this module can be used as a pixel clock source. Such a clock source can achieve faster pixel clock speeds than the PMP peripheral, yet the EBI shares the same pins as the PMP.

During data transfers, the PMP or EBI strobes a read or write signal after each pixel transfer. The read-write strobes act as the pixel clock for the display glass. After each line of pixel data is transferred, the CPU is interrupted by the DMA and certain timing signals – such as HSYNC, VSYNC and data enable line (DEN) – needed for LCD panels are updated. This is repeated continuously until an entire frame has been drawn. The frame is stored in volatile memory so the image can be dynamic. In this setup, SRAM is used and the configuration is the foundation for a controllerless graphics system. The system can be set up to use internal or external SRAM, as shown in figures 1 and 2. Though the controllerless graphics method was designed to work with TFT LCD panels, it can also work with CSTN or MSTN glass with minor modifications. The data lines consist of the pixel colour information. Most LCD panels can have eight to 24 colour data lines depending on the colour depth of the LCD panel. These data lines supply the LCD panel with the raw colour data of each pixel. The HSYNC, VSYNC, DEN and PCLK clock signals synchronise the pixel data with the graphics frame and the LCD panel. The sync lines tell the LCD panel when the data are at the start or end of a line (HSYNC) or a frame (VSYNC). The DEN lets the LCD panel know when valid pixel data are being sent to the LCD panel and is required for some TFT LCD panels because of the time needed to set up the LCD panel for proper pixel locations. Data are sent one line at a time until the entire frame is drawn. The PCLK signal is the clock source for the whole system. One clock pulse from the PCLK updates the LCD panel. All other clock lines must be synchronised to the pixel clock to achieve proper image output. LCD panels not containing HSYNC and VSYNC signals can still be used with the controllerless graphics setup.

Microchip's low-cost controllerless graphics PICtail Plus daughter board (LCC graphics board) was designed to demonstrate this technique and works with many existing PIC32 starter kits. The LCC software driver can help with synchronisation needing certain timing parameters, such as pulse width, front porch

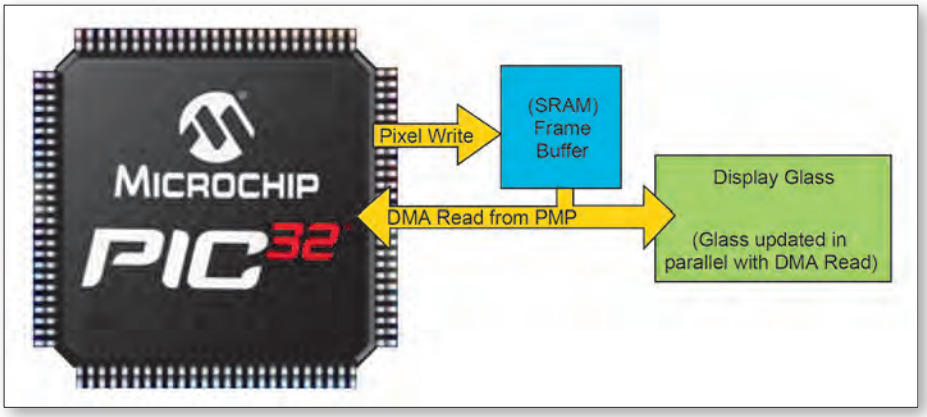

Figure 1. External memory method

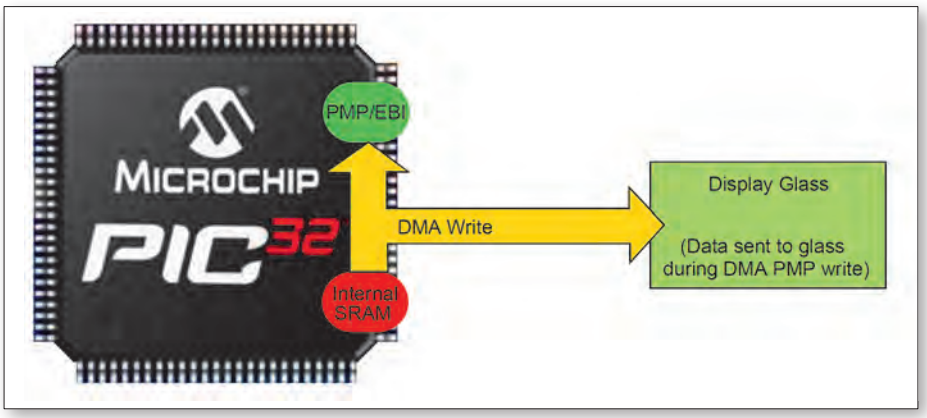

Figure 2. Internal memory method

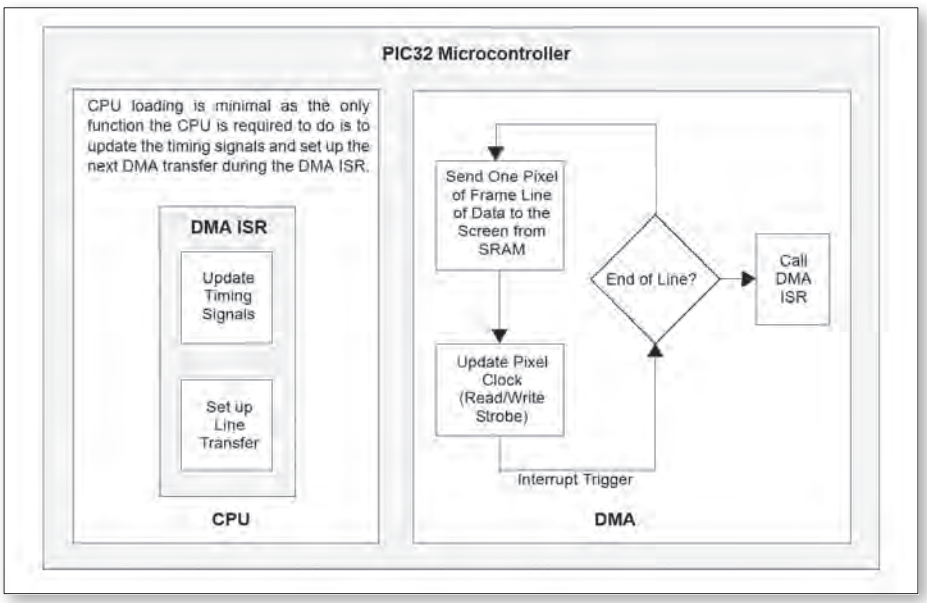

Figure 3. PIC32 microcontroller LCC graphics flowchart

and back porch for horizontal and vertical pulses. After these values are compiled into the LCC graphics driver, the LCD panel displays the frame. Figure 3 shows what happens inside the PIC32 microcontroller when a graphics frame is being sent to the display. The DMA and PMP block indicates what the DMA and PMP peripherals that share the data bus with the CPU are performing. The CPU block indicates the tasks required for graphics rendering. The DMA interrupt service routine (ISR) is the only code that must be written besides setting up the DMA and PMP peripherals to send a graphics frame to the display.

Rendering new pixels in the frame buffer is as important as refreshing the screen. This is performed by the CPU writing to the display buffer. If the frame is stored externally, the DMA transfer is suspended while the frame is being updated. This is necessary because there is only one PMP peripheral and it is being shared by the virtual graphics controller or DMA transfer. This method does affect the refresh rate of the screen. The amount of pixel updates needs to be monitored to prevent too large a refresh rate change, otherwise the change will be perceptible by the human eye. This is done by using a pixel count variable within the virtual graphics controller that is updated on every pixel write and cleared during every DMA interrupt.

With the introduction of the EBI peripheral, the suspension time needed for a frame update is dramatically reduced. When the EBI is used for writing, less data need to be stored and restored since the PMP registers are no longer being shared for reading and writing. Also, the EBI module is a more efficient peripheral when communicating to external SRAM.

The internal SRAM method uses the write strobe of the PMP for the pixel clock. Jumper rows one and two on the LCC graphics board must be set for this configuration. In this setup, all colour is 8BPP and no external SRAM is used. SRAM from inside the MCU is continuously writing its pixel values to the PMP. For 8BPP colour, a 332 RGB colour format is used, that is three colour values for red, three for green and two for blue. This is a common colour format, because red is an easier colour for the human eye to detect than blue.

The external SRAM method uses the read strobe of the PMP for the pixel clock. Jumper rows two and three on the LCC graphics board must be set for this configuration. In this setup, all colour is 16BPP and the external SRAM contains the graphics frame that is continuously being read. For 16BPP colour, a 565 RGB format is used with five colour values for red, six for green and five for blue.

In both methods, when connecting to an LCD panel with more than 16 colour lines, the unused colour lines are tied to the most significant bits of the last colour bit being used. This ensures that a full colour scale from white to black can be achieved. ■

Platform-based design for the Industrial Internet of Things

By Andy Chang, National Instruments

It will take a platform-based approach to achieve a fully connected world. The platform-based design concept stems from a formal modeling technique, clearly defined abstraction levels and the separation of concerns to promote an effective design process.

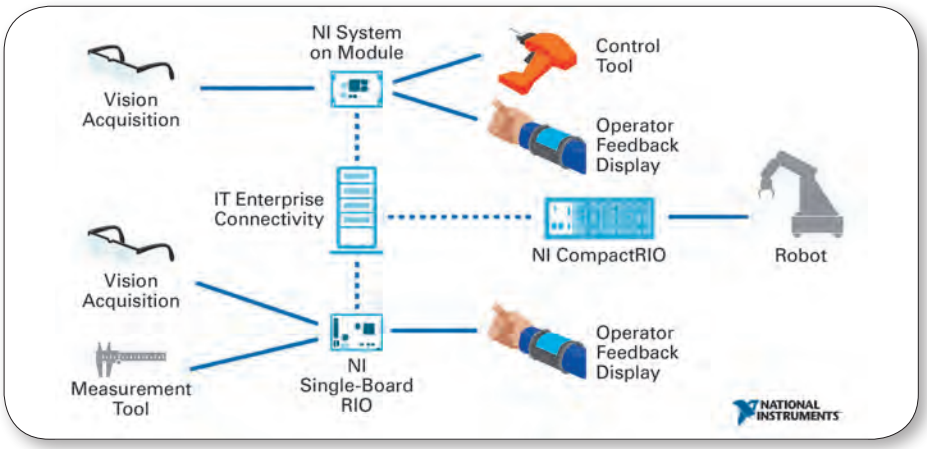

■ The IoT has the potential to impact our lives profoundly. Customers of National Instruments play a critical role in inventing, deploying and refining the consumer and industrial products and systems at the center of the IoT, as well as the wired and wireless infrastructure connecting those products and systems together. Spanning well over a decade, the NI and Xilinx technology partnership has provided engineers and scientists with tools to create world-changing innovations. NI has delivered latest generations of Xilinx devices in successive generations of its most advanced products, ranging from NI FlexRIO modules to CompactRIO controllers, as well as NI System on Module (SOM) and myRIO devices. NI takes great pride in its role helping innovators to design, build and test these intelligent devices with integrated software and hardware platforms.

According to Gartner Inc., an estimated 4.9 billion connected devices will be used in 2015, rising to 25 billion in 2020. These connected systems range from smart factory machines and advanced driver assistance systems (ADAS) in automobiles, to energy grids in smart cities and wellness wearables that help people live longer, healthier lives. The Industrial Internet of Things (IIoT) can be characterized as a vast number of connected industrial systems that are communicating with one another and coordinating their data analytics and actions to improve industrial performance and benefit society as a whole.

Industrial systems interfacing the digital world to the physical world through sensors and actuators that solve complex control problems are commonly known as cyber-physical systems. These systems are being combined with Big Analog Data solutions to gain deeper insight through data and analytics. Imagine industrial systems that can adjust to their own environments or even their own health. Instead of running to failure, machines schedule their own maintenance or, better yet, adjust their control algorithms dynamically to compensate for a worn part, and then communicate that data to other machines and the people who rely on those machines.

As such, the landscape of the IoT can be further segmented into three parts: the intelligent edge (sensor/actuator), the system of systems and end-to-end analytics that support all the connectivity and data analytics while meeting requirements of latency, synchronization and reliability. More often than not, different vendors produce these intelligent products, which have various embedded processors, protocols and software. The integration of these products throughout their design cycles to the final deployment is a key challenge. It will take a platform-based approach to achieve a fully connected world. The platform-based design concept stems from a formal modeling technique, clearly defined abstraction levels and the separation of concerns to promote an effective design process. All of these factors are critical in designing and building IoT systems. The idea is to provide engineers with the right level of abstraction while also providing connectivity to other elements and subsystems that may be in a different software language or framework, and different hardware protocol. For the last four decades, NI has provided powerful, flexible technology solutions that help engineers and scientists accelerate productivity, innovation and discovery. NI invests greatly in providing an integrated hardware and software platform to help its broad spectrum of customers - from healthcare and automotive to consumer electronics and particle physics - overcome complexity.

Specifically, the NI LabVIEW reconfigurable I/O (RIO) architecture takes advantage of the openness of both LabVIEW software and commercial off-the-shelf (COTS) hardware to provide a common architecture for designing and building IoT systems. Recently, LabVIEW RIO incorporated the Xilinx Zynq-7000 All Programmable SoC platform. The result will be to continue to drive openness and scalability through the introduction

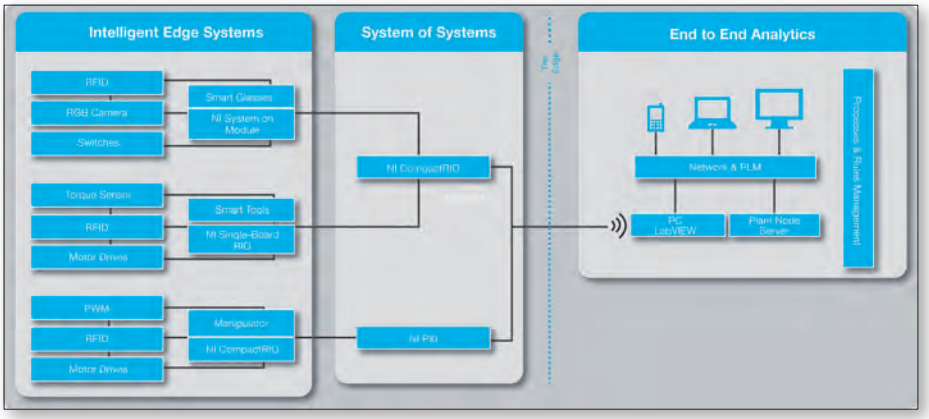

The three fundamental pillars of smart systems and the Internet of Things are intelligent edge systems, the system of systems and end-to-end analytics. Devices are becoming increasingly intelligent and defined through software.

of Linux real-time operating systems (RTOS) and by creating platforms that span across academia and industry with the same chip set. By combining LabVIEW RIO architecture with technologies such as NI DIAdem and NI InsightCM for data management and data aggregation, customers can design, build and test IoT devices throughout their product design cycle and perform preventative maintenance with a common platform and architecture.

The Internet of Things is already impacting our lives greatly. We have become increasingly dependent on personal devices such as smartphones and tablets and home devices such as the Nest thermostat and Philips Hue light bulbs. Meanwhile, the healthcare Internet of Things market segment is poised to hit $117 billion by 2020 using smart and connected sensors that allow patients to stream data to the medical infrastructure for diagnosis and prognosis. Devices such as fitness wearables and smart watches have just begun to emerge in the marketplace, and researchers are actively developing technologies for in-home rehabilitation and even intelligent prostheses.

In this market, Cyberlegs is a European FP-7 project led by Professor Paolo Dario of the Bio Robotics Institute at the Scuola Superiore Sant'Anna di Pisa in Italy. The project aims to develop an artificial cognitive system for lower-limb functional replacement for trans-femoral amputees. The goal is a multidegree-of-freedom system with the ability to replace the lower limb and otherwise assist the patient. Dr. Nicola Vitiello, who is responsible for developing and integrating the Cyberlegs system, used CompactRIO extensively to create initial prototypes and validate subsystems and control algorithms to predict accurate walking gaits for different patients. Using the ZynqSoC scalability in an NI SOM drastically decreased the footprint and power consumption required. Dr. Vitiello took advantage of the platform adaptability and was able to push the intelligence closer to the sensor and actuators in order to upgrade the prosthesis with a fully active knee. This development will allow patients to perform additional maneuvers such as negotiating stairs and walking on slopes.

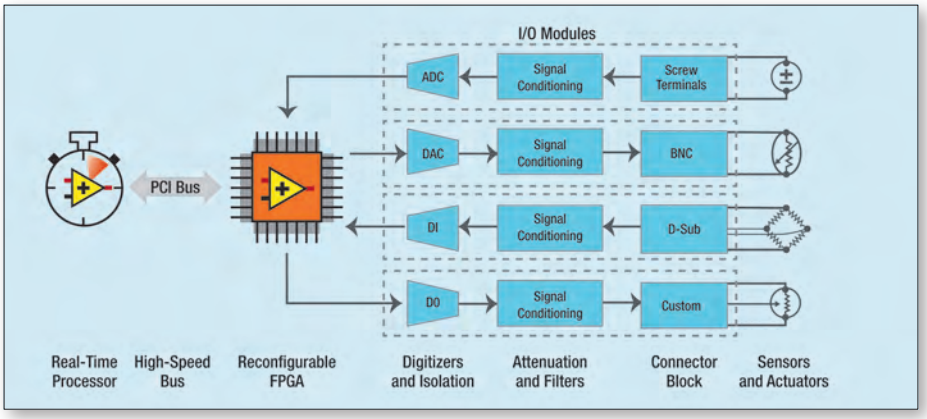

NI LabVIEW Reconfigurable I/O (RIO) architecture is based on four components: a processor, a reconfigurable FPGA, modular I/O hardware and graphical design software.

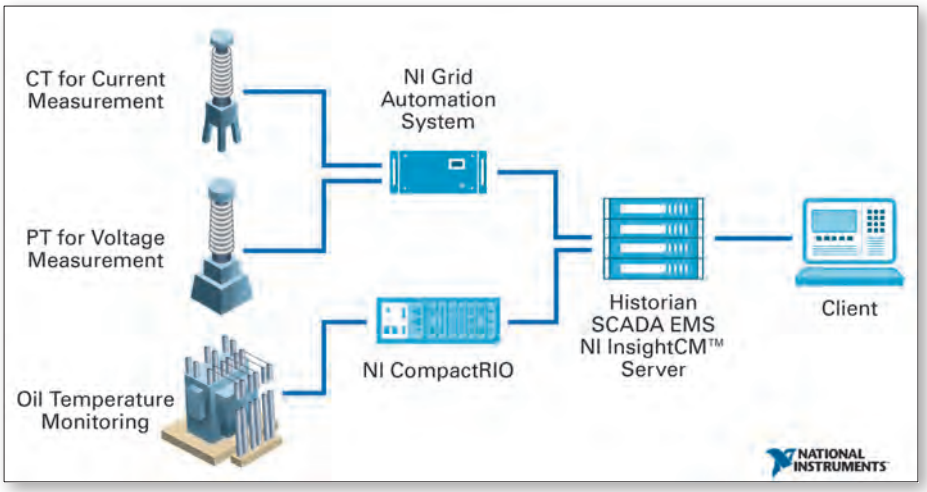

Figure 5. Smart grid architecture with an open, extensible approach to intelligent devices allows grid engineers to quickly respond to rapidly evolving measurement and control needs.

Gartner estimates there will soon be more connected devices than there are humans on the planet. By 2022, each household could contain more than 500 connected devices, creating 35 zettabytes of data that the communications infrastructure must be able to handle. With new intelligent devices being introduced to the marketplace and new communications standards and protocols proliferating, companies need to ensure they have a scalable framework to design, prototype and test these M2M communications to stay ahead of their competition. Traditional automated test equipment (ATE) was optimized to test technology that harnessed the power of Moore's Law, and it does this very well. But over the past few decades, a subtle shift to integrate more analog technology into ICs has resulted in a test challenge that requires much more than Moore. Innovation for the IoT has tasked test engineers with verifying mixed-signal systems that include both digital and analog signals from sensors, RF antennas and more, all at consumer volumes and for the lowest price possible. For test challenges tomorrow, traditional ATE falls short. Test engineers will need smart ATE for the IoT smart devices. ST-Ericsson is a case in point.

ST-Ericsson is an industry leader in semiconductor development for smartphones and tablets. It has development and test centers worldwide and multiple characterization labs that test and validate RF components and platforms used in the company products. These platforms usually contain multiple radios such as GPS, Bluetooth, 3G and 4G, among others. For one test set, a platform needs to make about 800,000 measurements. The complex nature of the chips that ST-Ericsson develops requires validation labs that are pliable enough for a variety of RF standards, but also have high enough performance for very stringent tests. Even interfacing with these chips requires multiple standard and custom digital protocols. Traditional boxed instruments such as RF analyzers, generators and digital pattern generators are bulky, expensive and simply not flexible enough. ST-Ericsson test engineers have replaced their traditional boxed instruments with the NI PXI platform and chose to use NI FlexRIO - which contains a Xilinx Virtex-5 FPGA - to communicate with different digital standards such as serial peripheral interface (SPI) and inter-integrated circuit (I2C). When a digital adapter module was unavailable, the team quickly developed its own without having to worry about the back end to the PC and communication with the FPGA. Overall, the PXI-based system was 10 times faster and three times less expensive than the previous solution, the company reported. The PXI platform also provided the flexibility needed to adapt to multiple digital and RF standards.

Airbus, a leader in aircraft manufacturing, is launching a research-and-technology project aimed at pushing emerging technologies to improve the competiveness of its manufacturing processes, still dominated by manual operations today. The Airbus "Factory of the Future" implies the extensive use of a modular platform with a high abstraction level based on COTS modules. Smarter tools are key components for improving efficiency in the Factory of the Future. These smart devices communicate with a main infrastructure or locally with operators, but only when needed to provide situational awareness and make real-time decisions based on local and distributed intelligence in the network. In the case of a manufacturing facility, smart tools can help simplify the production process and improve efficiency by removing physical data logs and manuals. Operators must focus on their operational tasks, during which they need to keep their hands free for using the appropriate tools. Most previous initiatives of Airbus involved paperless projects that focused on paper suppression or on replacing paper with tablets; they still consumed passive, "dead" data.

Smart tools provide an alternative, data in context, which is generated and consumed continuously - in other words, live data. Airbus tested the Zynq-SoC-based NI SOM as the foundation platform for all of these smart tools. Use of the NI SOM speeded up the development process from design to prototype to deployment. Before developing on the NI SOM, Airbus created a prototype built around a Zynq-SoC-based CompactRIO controller (NI cRIO-9068) that allowed them to integrate IP from existing Airbus libraries and open-source algorithms to validate their concepts quickly. The flexibility of using graphical and textual programming, along with reusing third-party development ported on top of the Xilinx Zynq-SoC, and the NI Linux RTOS offered the perfect level of abstraction for developing these tools. Airbus engineers can now reuse the code they developed on the NI SOM as a deployed solution rather than having to restart the entire design process. Airbus evaluated several SOMs and embedded single-board computers (SBCs), and found there was no comparison with the NI platform-based design approach and hardware-software integration. Airbus engineers estimate that their time to deliver with the NI SOM is a tenth of what it would be using

alternative approaches due to the productivity gains of NI approach to system design, particularly with NI Linux Real-Time and the LabVIEW FPGA Module. With the software already provided by the NI SOM, Airbus can focus more on system key features, such as image processing on FPGAs.

Another key Industrial IoT application is in renewable energy, where demand has rapidly increased as fossil fuel plants become decommissioned. Grid operators are finding that traditional measurement systems do not offer adequate coverage to handle these new challenges or manage the new risks they face. National Grid U.K., the transmission system operator for nearly 20 million people in the United Kingdom, is deploying an advanced, upgradable grid measurement system to provide better operational data for the condition of the U.K. grid. Like many energy providers, National Grid U.K. faces the challenges that come with a rapidly changing grid; thus, the company is focused on developing a flexible solution that can be upgraded with new software as the measurement needs of the grid and amount of data available evolve.

Gathering reliable, real-time data from all grid areas is critical to identifying problems early and preventing power disruptions. To keep the grid running consistently, operators must be able to gather data from a wide range of measurements and quickly gain insight from that data to monitor the overall health of the grid. Software-designed systems provide customized measurement solutions that can be upgraded in the future as new grid modernization challenges arise.

To address these challenges, National Grid U.K. adopted a platform built on the Zynq-SoC-based CompactRIO system that can provide more measurements and adapt with the evolving grid for generations to come. This interconnected network includes 136 systems, with 110 permanently installed in substations throughout England and Wales, and 26 portable units that provide on-the-go spot coverage as needed. An identical software application runs on both versions, minimizing the impact on system integration, training and support. With an open, flexible, software-designed instrument, National Grid U.K. engineers can customize the information available for grid operation and easily make upgrades as needs change.

This approach improves grid monitoring and reliability while reducing the amount of equipment needed. Additionally, with the advanced processing power of CompactRIO, National Grid U.K. can easily maintain its network of connected systems and push intelligence down the grid to turn massive amounts of raw data into useful information, keeping the lights on for millions of businesses and homes throughout the United Kingdom. The idea of a smarter world that involves systems with sensors and local processing connected to share information is taking hold in every industry. These Industrial IoT systems will connect with users and with one another on a global scale to help users make more informed decisions.

Developing and deploying these systems will involve a massive investment for decades to come. The only way to meet the needs of today and tomorrow is by deploying a network of systems flexible enough to evolve and adapt through a platform-based approach. A single flexible hardware architecture such as the Xilinx Zynq-SoC, deployed across many applications, removes substantial hardware complexity and makes each new problem primarily a software challenge.

The same principle must be applied to software tools to form a powerful hardware-software platform that creates a unified solution. An effective platform-based approach does not focus on hardware or software but instead on the innovation within the application itself. The ongoing design of the IIoT represents a massive business and technology opportunity for everyone. Organizations worldwide are working hard to define the IIoT and actively gather use cases to better understand how best to foster more innovation.

Engineers and scientists are already implementing systems on the leading edge of the IIoT, but they face many unknowns and much work ahead. Engineers and scientists must start concentrating on a platform-based approach and become part of the IIoT generation by getting involved with these bodies to define the future and ensure that businesses focus on innovation and not simply integration. ■

Building blocks for IoT: COM Express modules with latest Intel processors

By Konrad Löckler, MSC

Embedded systems specially optimized for IoT applications, to satisfy customer requirements, can only be quickly implemented with a comprehensive pallet of predefined building blocks. As core blocks, MSC Technologies offers three new module families with scalable performance based on state-of-the-art Intel processor technologies.

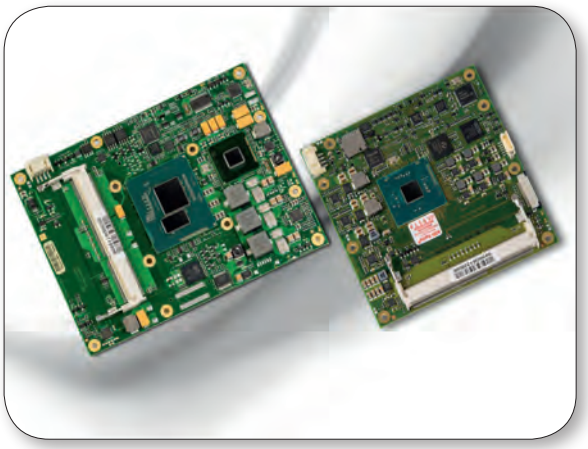

Figure 1. COM Express Type 6 module families MSC C6C-BW and MSC C6B-8SB

■ Modern embedded systems are becoming ever more intelligent and complex because of the close integration of hardware, software and mechanical systems. To ensure short innovation cycles, compact products can be implemented purely on the basis of standardized Computer-on-Modules (COM). The immediately deployable modules provide state-of-the-art PC functionality with scalable processor and graphics performance. The COM is simply inserted with a standardized connector onto the baseboard that implements all application-specific functions. This not only reduces the development complexity and the development costs, but also significantly optimizes the time-to-market of the complete system.

Most of embedded modules nowadays meet form factor and performance parameters defined in internationally recognized standards. The COM Express form factor defined by the PICMG organization and the Qseven form factor defined by the SGET consortium have become well established in recent years. COM Express addresses mainly the high-end market with powerful modules that integrate, for example, a fifth or sixth generation Intel Core processor. Low-power solutions are available in the compact and mini format. The Qseven standard, which specifies compact modules in the form factor of 70 mm x 70 mm, supports both x86 and ARM/RISC architectures. Over the next few years, numerous interesting applications for powerful computer modules promise a strong demand. A particular challenge is the development of embedded solutions for future markets such as building automation, power engineering and the Internet of Things (IoT). Scalable low-power processor technologies, maintenance-free system solutions, well thought out remote management and intelligent communications structures are a necessity for the IoT. The embedded hardware must operate reliably 24/7 and have sophisticated security functions.

Tailored embedded systems to meet customer requirements can be implemented quickly and with optimized costs only thanks to the availability of a comprehensive pallet of standard products and an integrated platform concept. The design-in specialist MSC Technologies has defined various building blocks for the design of custom-optimized systems. The building blocks are scalable in their performance and are ready-to-use on the customer's demand. The building block system includes standardized Computer-on-Modules, baseboards, standard mainboards, flexible industrial housings, cooling solutions, modern memory modules, solid state disks and displays with or without touch technology – everything from a single source. A focal area is the provision of the principal building blocks required for the rapid implementation of IoT applications, including complete gateways for M2M systems. This includes the definition, development and production of scalable core blocks, such as energy-efficient Computer-On-Modules or compact Box-PCs. Modules for wireless connectivity marketed by distribution channels are also important. Software integration also plays an important role, in particular when implementing the required security features. Secure gateway solutions are available for reliable communication with the appropriate cloud services. Various security solutions, such as Intel Gateway Moon Island, can be integrated as a functional building block. A particular strength of MSC Technologies lies in Secure Boot solutions that are implemented in close cooperation with the associated customer.

Data security of the communication and protection against external spy and hacker attacks is an essential basis for implementation of a smart factory using the Internet of Things (IoT). Today, embedded modules already have special security features as standard and can thus make a substantial contribution to system security. An on-board Trusted Platform Module (TPM) offers security functionality in accordance with the specification

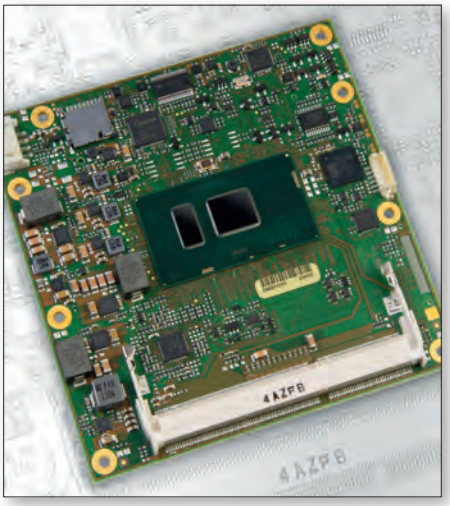

Figure 2. MSC C6C-SLU COM Express module with innovative sixth generation Intel Core processors

1.2 of the Trusted Computing Group (TCG), an international standards body. The TPM ensures that the system is securely integrated into the network from boot-up to start-up of the operating system through to loading of the relevant application software. The standardized embedded modules are characterized by the high scalability of their processor, graphics and video performance. To implement IoT systems, MSC Technologies offers a wide range of COM Express Type 6 module families.

For IoT gateways that initialize, convert, forward and buffer data, as well as for operator consoles, MSC Technologies offers as building block the MSC C6C-BW COM Express Type 6 module family (figure 1 right). The module is based on the latest Intel 14nm technology and integrates quad-core or dual-core Intel Pentium or Celeron processors (codename Braswell). Thanks to the on-chip Gen. 8 Intel HD Graphics, the COMs offer twice the graphics performance of the previous model with Intel Atom CPU (codename Bay Trail), and yet less power consumption. The module in the compact form factor of 95 mm x 95 mm is therefore particularly suitable for graphics-intensive embedded applications for the presentation or processing of high-resolution graphics and videos.

The low power consumption of the embedded platform is between 6W and 9W, and the integrated processors have a thermal design power (TDP) of 4W to 6W. Three independent displays with up to 3840 x 2160 pixels can be connected via the HDMI, DisplayPort and Embedded DisplayPort/LVDS graphics interfaces. The module can be equipped with up to 8GB dual-channel DDR3L SDRAM with high memory bandwidth via two 204-pin sockets. The wide range of modern interfaces includes two SATA 3, four USB 3.0, four USB 2.0 and up to five PCI Express x1 channels. A microSD card can be plugged in as an on-board mass storage device.

For demanding applications, e.g. extensive data processing and control of high resolution displays, the MSC C6C-SLU Type 6 COM Express module family (figure 2) was developed. The platform is based on the latest sixth generation Intel Core processors (codename Skylake-U) that integrate the low-power processor with graphics controller and the complete chipset in one multichip package. Three processor variants with dual-core Intel Core i7-6600U, i5-6300U and i3-6100U are offered. The thermal design power (TDP) of the integrated processors is 15W. The on-chip Intel HD Graphics Gen. 9 supports DirectX 12 and OpenGL 4.4. Three independent displays with up to 4k x 2k resolution can be controlled.

The energy-efficient COM Express modules in the compact form factor of 95mm x 95mm have typical power consumption between 17W and 19W. Due to their low power consumption they enable the implementation of high-performance embedded systems, without the need for extensive cooling requirements.

The MSC C6B-8SB high-end module which is equipped with quad-core fifth generation Intel Core processors (codename Broadwell) features a significant leap forward in computing and graphics performance (figure 1 left). The module is offered with two different Intel Core processors (i7-5700EQ or i7-5850EQ), each with four processor cores. In addition to a comprehensive range of interfaces, the COM – in the basic form factor of 125mm x 95mm – offers an Intel HD graphics controller GT2 or GT3e with additional graphics memory, turbo boost capabilities for the CPU and graphics controller, hardware-accelerated video encoding and decoding as well as enhanced security features. Typical applications are digital image and video processing systems and optical inspection systems.

For rapid evaluation and rapid prototyping of the Type 6 COM Express module family, the MSC C6-MB-EV Mini-ITX evaluation board is delivered. The universal baseboard provides connectors for USB, GbE LAN, audio, DisplayPort, eDP, and LVDS. The board comes with a PCI Express x16 slot, a PCI Express Mini Card socket for I/O extension, and an SD card slot. Standardized Computer-On-Modules of various performance classes permit the rapid and cost-optimized development of customized systems. Flexible configurations and a high degree of individuality of the embedded products can be implemented even for medium-volume quantities. ■

Leveraging modularity in embedded design to accelerate IoT proliferation

By Prakash Mohapatra, Toradex

This article explores how adopting the modular approach in developing IoT devices can accelerate the proliferation of IoT. We will see exponential growth of IoT applications, but cost will determine user acceptance and market penetration. COM/SOM offer an ideal cost-effective platform for making this growth possible.

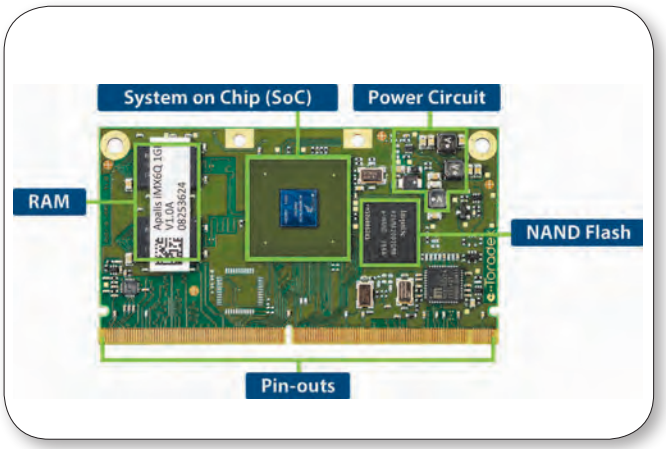

Figure 1. Details of Computer on Module

The concept of modularity is widely deployed in many industries such as transport and logistics, packaging, software and many more. Although the interpretation may differ across various industries, in simple terms modularity means that a large system can be created by combining many standardized small sub-systems or units. The benefits are enormous in terms of reduction of system development time and cost and addition of scalability, convenience, and customization.

First coined by Kevin Ashton back in 1999, the phrase Internet of Things (IoT) has evolved a lot over time. In simple terms, the phrase can mean ubiquitous connectivity. It promises an era in which discrete things or objects are connected through Internet or other connectivity mediums, and these objects individually or collectively achieve some meaningful result. So, maybe in the near future, when you are left with only a few beer cans, your fridge can directly order beer from an online-grocery site. That would be awesome!

IoT is creating possibilities with which technology is getting deeply embedded in our lives. Some fields showing promising IoT applications are smart homes, smart cities, security and assistance, connected vehicles, industrial automation, healthcare, wearables, and many more. With the advent of pervasive connectivity, cognizance has entered into the non-living realm. Things or objects can now take autonomous decisions based on some events, without human intervention.

Although the IoT ecosystem is colossal, at the ground level, it is supported by embedded devices that have some processing power, memory, and some I/O. Embedded devices such as sensors and gateways play an important role in driving IoT. Sensors are compact, power-efficient, application-specific devices that monitor the ambient environment and pass on the information, using Internet or another connectivity medium, to a gateway that processes the data and takes some actions.

As gateways may receive data from multiple sensors, they therefore need some processing power, memory and a set of I/Os. An industrial plant monitoring system can be easily made with few sensors and a gateway. The sensors can monitor a variety of parameters such as plant temperature, vibration, etc and pass on the information to a gateway. The gateway receives the data and checks for any anomaly. In case of any abnormal condition like high plant temperature, it can send a message to the smartphone of the plant technician. If everything is normal, then the gateway can upload the data to a cloud-server for analytics and maintenance records. Let´s come now to the embedded development of sensors and gateways. Usually, sensors are simple, application-specific and standardized, microcontroller-based devices. The gateways need to be versatile in terms of computing, storage and connectivity requirements, thus the embedded development of these devices becomes a bit challenging. There are many standardized gateways available in the market; however, there may be scenarios where these gateways do not fulfil your price, performance, power, or connectivity requirements. Let´s explore constraints in various embedded platforms that are employed for product development of embedded devices such as gateways, and then attempt to showcase how the concept of modularity can be leveraged to reduce time-to-market and development cost of IoT devices.

Usually, OEMs prefer to develop the hardware and software from scratch as it offers them total control over the project and they can customize the platform based on their requirements. The hardware components such as SoCs, memories, power supplies, multimedia and connectivity interfaces, peripherals, displays, etc are integrated over a printed circuit board (PCB). The software stack including device drivers, board support packages, user interface, etc are developed either in-house or some parts are outsourced by the OEMs. This method incurs the following

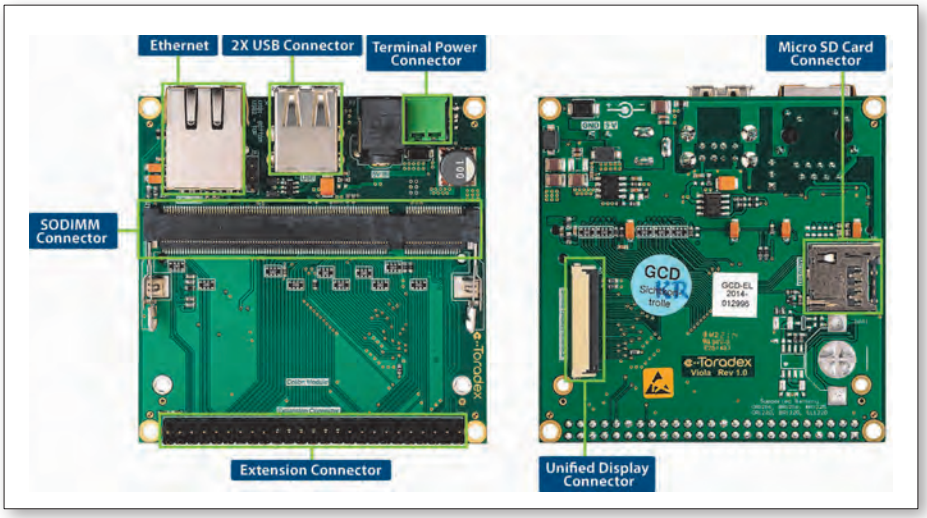

Figure 2. An illustration of Viola - a small form-factor (74 mm x 74mm), ultra-low-cost carrier board

constraints. Boost NRE (Non-Recurring Engineering) cost. High investment in engineering resources as the team needs diverse expertise in both hardware and software. Further, product development time is long leading to inflated engineering cost. High input cost. Usually, sales volume of embedded products is low. So, OEMs cannot leverage economics of scale in low-volume procurement of components such as SoC, and thus pay higher prices. Long time-to-market. As the development happens from scratch, the development time increases, meaning long time-to-market. High development risk. With scratch development of hardware and software, there is a high probability that things may go wrong at any level. This adds significant risk to the project compromising time-to-market and development cost. Questionable scalability. With Moore's Law in action, the silicon components such as SoCs are getting matured in terms of performance, power-efficiency, and cost-effectiveness. However, it is impossible to scale up an embedded platform to accommodate these advances without redesign. Product risk. There is a substantial risk associated with the supply chain of the end-product in case any silicon component (SoC, RAM, flash memory) reaches the end of life.

SBCs (single board computers) offer a ready-to-use embedded platform on a single PCB for developing any end-product. The OEMs select SBCs that are best suited for their requirements and then develop the end-application. Although SBCs are application-ready, they suffer from some loopholes. Not scalable: the SBC approach leads to high switching cost to migrate to future technologies. As the CPU is closely coupled with the I/O section on a single PCB, it is not possible to upgrade processing power without going for a new SBC. No customization: customizing a special SBC for the OEM requirements is not possible, because the CPU and surrounding I/Os

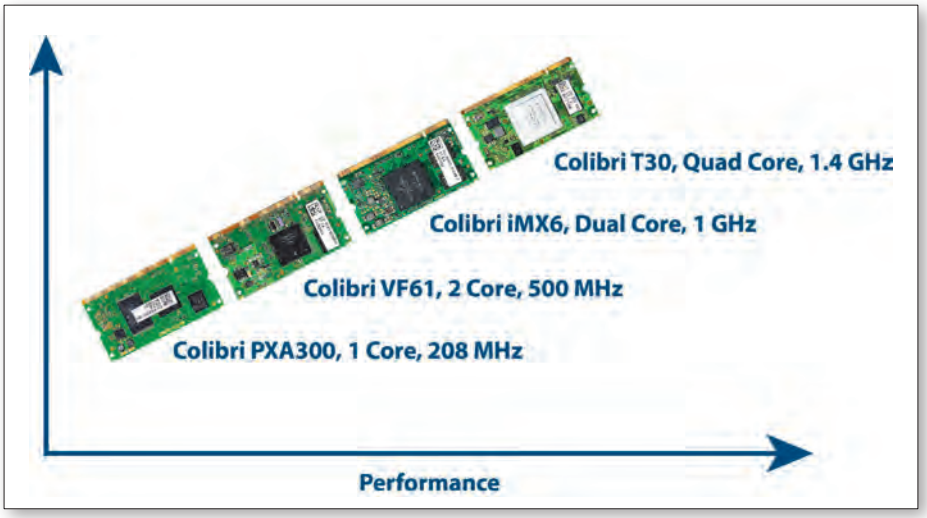

Figure 3. Pin-compatible COMs with different performance levels

are closely coupled to the single-board design. Fixed size: space-constrained applications may struggle to use SBC as the size may not be ideal. Currently, low-cost SBCs such as Raspberry Pi and Beagle Bone are really popular in the embedded market. These open-source and community-backed platforms can also be used to develop IoT products. These SBCs are ideal for DIY and academic projects. However, they are not appropriate for commercial development of embedded products because they are not industrial hardware (temperature range, vibration), have no committed or dedicated support in terms of software and hardware, product lifecycle is not guaranteed, and no product change notification policy is available.

An embedded platform can be represented as follows:

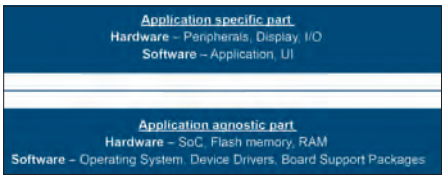

The application-agnostic part consists of essential design commodities, including the processing and memory requirements. This part may not differ much whether the end-product is a medical device or retail PoS device, assuming the processing and memory requirements are somewhat similar. This application-specific part constitutes both the hardware and software, depending on the application and OEMs requirements. OEMs can differentiate their products from those of their competitors by adding value to this part.

A computer-on-module (COM) or system-on-module (SOM) is a cost-effective, reliable and ready-to-use computing solution that consists of the application-agnostic hardware and software. System developers can focus on the application-specific part by using an off-the-shelf COM, and thus accelerate time-to-market without compromising on product development cost and risk. The combination of an application-agnostic COM and application-specific carrier board along with display and peripherals offers a complete platform for developing any end-products. The carrier board houses all I/Os needed for the specific end-application. The COM can be inserted into the carrier board through some standard connector such as SODIMM connector. Many COM suppliers also offer off-the-shelf compatible carrier boards. The revamped embedded platform can be represented as follows:

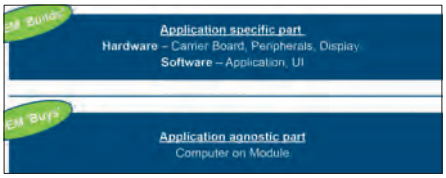

Usually, off-the-shelf carrier boards may not fulfil packaging, I/O configuration, functional and size requirements, so OEMs prefer to develop and design their own carrier board. Development of customized carrier boards can be really made easy in case the layout and schematics files of compatible carrier boards are shared by the COM suppliers. The revamped embedded platform can be represented as shown in figure 2.

Usually, OEMs prefer chip-based development; however, as mentioned, there are many constraints in this approach. A COM addresses these constraints effectively. It reduces development cost. COM vendors procure silicon components such as SoC, memory, etc in high volume, thus pay less than OEMs for their low-volume procurement. By using an off-the-shelf COM, OEMs can leverage economies of scale to bring down input cost. Further, OEMs can only focus on developing the application-specific part of their product, and thus reduce NRE cost. COMs accelerate time-to-market. As the COM offers an application-ready platform OEMs can accelerate the time-to-market for their products and reduce development risk. COMs are extensively tested by the suppliers and other customers, so OEMs can significantly reduce their product development risk. Some COM suppliers such as Toradex offer pin-compatible COMs with a variety of performance, price, and I/O. OEMs can easily scale up their platforms to accommodate future market demands and latest technologies. COMs offer access to latest technology. Usually, market leaders of silicon components such as SoC and flash memory do not engage with low-volume customers, so OEMs may struggle to get access to latest technological advances. COMs vendors ensure the adoption of such technologies in the embedded devices by engaging in large-volume business with market leaders of silicon components.

It can be summed up that COM/SOM offers an ideal platform for developing embedded devices including IoT products. IoT is still in the nascent stage and many discussions around it create more questions than answers. Growth of the IoT is restricted by many issues such as lack of uniform communication standard, ambiguous revenue model, questionable utility, security threat, etc. We can expect the IoT products will evolve gradually to alleviate these issues. So the embedded platform, which is the foundation of IoT, should be scalable and flexible to adapt as per future needs. With advances in semiconductor technology, we can expect advanced security features that will make the silicon components more ideal for IoT. Migration to the latest technology is easily possible in an embedded platform using COM, as the processing and memory section is isolated from the I/O section.

Toradex is well placed to meet the demands of the IoT market. It offers ARM-based COMs at a variety of price, performance, and power to match the diverse needs of the market. Further, the availability of connectivity interfaces such as Gigabit Ethernet, PCIe, SATA, CAN, and many more industrial standards, makes these COMs suitable for a wide range of IoT applications. The COMs are pin-compatible, thus upgrading the platform, based on future needs and technology is feasible without any redesign effort. It also offers standardized carrier boards that are compatible with the COMs. Customized carrier board development is also easy as the carrier board schematic and layout files are freely downloadable. Customers can easily use these files as reference for designing their customized carrier boards. ■

Serial NOR flash memory with ultra-low power and wide voltage range

By Heko Arndt, Macronix

Macronix has recently introduced its new MX25R serial NOR flash product family. The devices are specifically aimed at next-generation consumer wearables in the context of the Internet of Things (IoT).

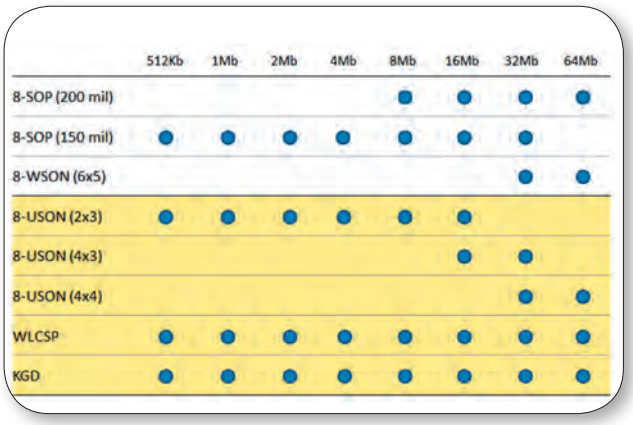

	512Kb	1Mb	2Mb	4Mb	8Mb	16Mb	32Mb	64Mb
8-SOP (200 mil)					●	●	●	●
8-SOP (150 mil)	●	●	●	●	●	●	●	
8-WSON (6x5)							●	●
8-USON (2x3)	●	●	●	●	●	●		
8-USON (4x3)						●	●	
8-USON (4x4)							●	●
WLCSP	●	●	●	●	●	●	●	●
KGD	●	●	●	●	●	●	●	●

Figure 1. Available package formats for MX25R serial NOR flash devices

■ The MX25R product family features an ultra-low-power mode and densities ranging from 512 Kbit up to 64 Mbit, with plans to move up to 128 MBit, 256MBit and 512MBit in the near future. Power consumption in the family is 60 percent lower than traditional solutions, with a wide Vcc span of 1.7V to 3.6V to support diverse requirements of wearable devices. The new family fits within the Macronix portfolio of serial NOR flash products ranging from 512 Kbit to 1 Gbit. The MX25R series caters specifically to next-generation consumer wearables. It supports the standard serial NOR flash memory interface and industry-standard 8-pin layouts. With its very compact die, this allows for very small package dimensions such as the USON (ultra thin small outline no lead), WSON (very very thin small outline no lead), WLCSP (wafer level chip scale package), and also KGD (known good die) solutions for stacked-die SIPs (system in package).

The market prospects for wearables, in their first incarnations coming as sensor-enabled wristbands and rings, or smart watches equipped with fitness and location trackers, are a promising sub-segment of the IoT category of systems and services. According to new research from International Data Corporation (IDC), IoT systems and services promise a potential compound annual growth rate (GAGR) of 78.4 percent. By 2018 annual sales for wearables may exceed a total unit volume of 112 million units according to a recent report published by US market researcher IDC. This market dynamic has encouraged Macronix to develop novel product solutions of memory devices for wearable applications to further expand its leading position as a vendor of non-volatile memory devices.

The key factor for wearables to gain rapid popularity is designing them with ultra-low power consumption and in a small form factor. The next generation of memory devices will progress in the following directions: standardized interfaces prioritizing ease of data import, smaller and slimmer form factors and a power supply design focusing on ultra-low voltage and energy consumption.

Judged by its dominating presence at the 2015 Consumer Electronics Show (CES) in Las Vegas the Internet of Things (IoT) provides a forward-looking perspective for the anticipated wide-area networking between people and things in a real-world environment. In this view, IoT should be understood as a generalized category and a driver to build a consensus for a comprehensive data network and its step-by-step implementation. The need for consensus-building results from the multitude of competing processor platforms and operating systems, in addition to the various protocols for radio interfaces and data security measures. This pertains to the consumer realm as well as to its industrial-use counterpart in the guise of Industry 4.0. All these developments involve an extraordinary systems complexity.

Accordingly, there are several large, distinctive market segments for IoT devices and systems: cloud services and data centers, gateways for mobile telephony, automotive connectivity, home media, and a myriad of consumer-oriented IoT nodes for consumers in the form of ultra-compact, sensor-enabled terminal devices for data acquisition and wireless transmission over short distances to their personal base stations, such as smart phones and tablets. Most attractive from a current market perspective are the wearables, since they will establish large consumer markets. This is clearly indicated by the number of the semiconductor vendors focusing on wearables and smart home systems and the prioritization

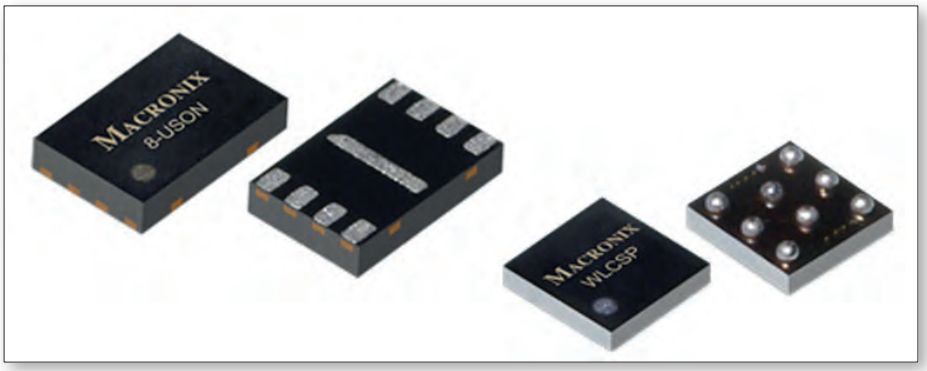

Figure 2. USON and WLCSP packages for the Macronix serial NOR flash MC25R series

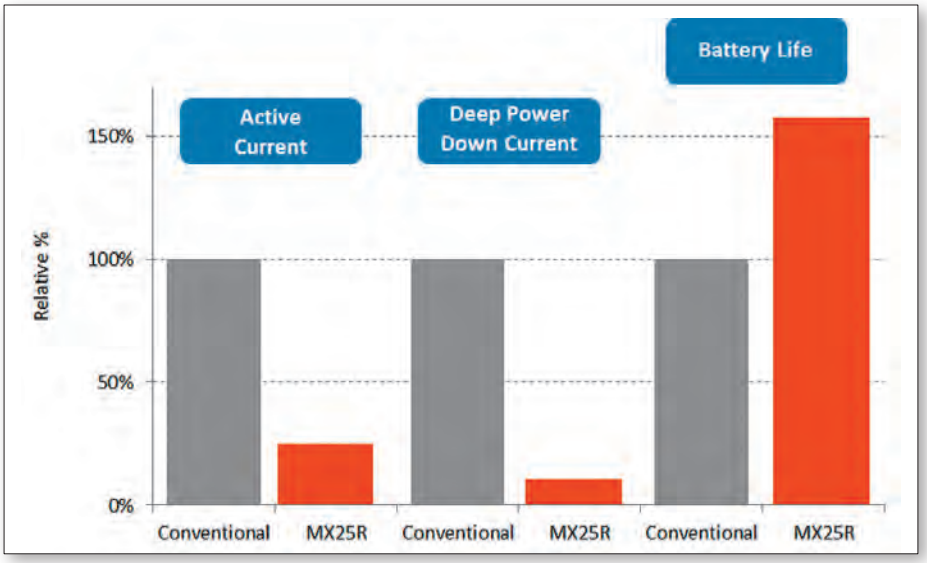

Figure 3. Performance overview of the serial NOR flash series in regard to active current, deep-power-down consumption and battery lifetime in wearables

Figure 4. Inspecting a batch of memory devices at Macronix in HsinChu, Taiwan.

they are giving this segment. Among them are NXP, Freescale, Qualcomm, TI, Sony, MTK, Intel, Infineon and others. Of course, ARM as a licensor is heavily engaged in this realm as well. Another market segment offering good prospects for high sales volumes, which could gain in importance in the mid-term, is smart lighting and smart metering, plus home security and home control systems equipped with thermostats and related equipment. However, this segment may attract a smaller number of device vendors since it involves different, somewhat higher demands on product quality. Macronix is set to contribute to these emerging markets through specific incremental improvements of non-volatile memory devices, especially in regard to ultra-low power and standby modes. In stark contrast to the more broadly defined Internet of Things, with its complex infrastructure and fast transfer of large amounts of data, the wearable devices segment calls for a pragmatic system partitioning. Wearables, per definition, are the smallest possible data systems to be worn close to the human body. If they were larger they wouldn't be wearables anymore. Wearables, in contrast to smart phones and multimedia systems, don't require high memory densities and large memory spaces since they connect wirelessly with their dedicated base stations.

The new serial NOR flash MX25R Series was specifically designed and laid out for the relevant performance requirements of wearable devices – that is, eliminating all non-essential structures and features. Among other measures, the internal buffers were tailored to the envisioned applications, whereas a typical high-performance memory cell would comprise large internal RAMs. In wearable applications, when focusing on frequencies of just a few megahertz, there are further routes for optimization to reduce die size and power consumption, while maintaining all options for system designers to still utilize special 'performance modes' - at the cost of higher power consumption. In its deep-power-down (current-saving) mode the MX25R devices offer a very favorable power budget, with savings of more than 90 percent compared to traditional solutions.

In regard to connecting the memory device with the system environment, the MX25R is compatible with the well known and widely-used standard serial NOR flash interface. This eliminates additional development efforts on the user side and it accelerates time to market. With regard to active current, the MX25R device – drawing 4mA (8mA peak) - is situated at the lower end of the range available in the market. As a first estimation the active current of the device is 70 percent lower than with traditional last-generation memory solutions: in deep-power-down mode the difference goes up to more than 90 percent.

With its wide supply voltage range of 1.7V to 3.6V, the new memory series not only consumes less power during standard operation but enables designs to operate over the full Vcc range of the battery, thereby eliminating the need for external regulators. MX25R-based applications continue to operate even when the remaining battery capacity goes down to voltages below 2.7V. This further extends battery life by up to 50 percent. ■

PLS: UDE available for Cortex-M7 core-based STM32F7 series MCU

PLS Programmierbare Logik & Systeme presents Version 4.5 of its Universal Debug Engine (UDE). The UDE 4.5 provides developers with an optimized testing and debugging environment for the first Cortex-M7 core-based MCU of STMicroelectronics new STM32F7 series.The STM32F7 series MCUs not only feature a Cortex-M7 core that can be operated at frequencies up to 216 MHz, but also up to 1 Mbyte embedded Flash, 320 Kbytes SRAM and high-performance peripheral units (graphic accelerator, Ethernet, USB and audio interfaces, etc.).

News ID 3590

Rogue Wave Software releases 2015 Open Source Support Report

Rogue Wave Software released their 2015 Open Source Support Report, solidifying the company as a leader in the open source software community and providing information on OSS package use that could only be gathered from their own database. Taking data from over 8,000 OSS packages, surveys, experiences, and experts from across different industries, this report brings a new level of visibility into OSS support reporting that has been lacking until now.

News ID 3586

Renesas: Synergy Embedded hardware/ software platform targets HMI

Renesas Electronics announced availability of the first products in the company's new Renesas Synergy Platform, a qualified, easy-to-use platform designed to accelerate time to market, reduce total cost of ownership and remove many of the obstacles engineers face when designing Internet of Things and other embedded applications. The platform's first products include the S7G2 and S3A7 microcontroller groups, which target connected human machine interface and power-efficient control applications used in industrial, healthcare, home appliance and metering products. Development kits featuring the two MCU groups, software development tools, and the Renesas Synergy Software Package (SSP) are available now from the Renesas Synergy Gallery.

News ID 3549

SEGGER: emSecure offers two schemes for signature generation

With emSecure-ECDSA, SEGGER is adding a new powerful product to its digital signature suite. The emSecure software package now offers two different schemes for the generation and verification of digital signatures – RSA and ECDSA. This widens customer options when using emSecure to protect against firmware hacking and hardware cloning. emSecure is a software solution to authenticate digital assets.

News ID 3545

SEGGER: J-Link keeps important functions alive while debugging Cortex-M devices

SEGGER has introduced a major new feature for its J-Link debug probe, which enables an embedded system based on a Cortex-M3, M4 or M7 core to maintain essential functionality while being debugged. This is particularly important when hardware such as a motor has to keep running, or to keep communication links connected.

News ID 3569

Phaedrus Systems: Segger launches new IoT Security middleware

Phaedrus Systems is now supplying new software from Segger that provides tools for creating the Secure Internet of Things. The software includes Cyclic Redundancy Checking (emLib CRC), an IPv6 TCP/IP stack (embOS/IP) with Secure Sockets Layer (emSSL) and a digital signature suite (emSecure-ECDSA). They are joined by a new data compression tool (emCompress) and a tool for digitally signing and verifying documents (emSecure Sign and Verify).

News ID 3585

AdaCore and Altran to sponsor High Integrity Software Engineering Conference

AdaCore and Altran have announced their sponsorship of High Integrity Software 2015, a conference taking place in Bristol on 5 November 2015. The conference seeks to explore the challenges that arise from our increasing dependence on safety-critical software with some of the field's leading experts and to present practical experience and emerging technologies that will help engineers to address these challenges.

News ID 3584

MathWorks introduces WLAN System Toolbox for MATLAB

MathWorks introduced WLAN System Toolbox, providing standard-compliant functions for the design, simulation, analysis, and testing of wireless LAN communications systems. WLAN System Toolbox expands capabilities of MATLAB for wireless development by providing configurable physical layer waveforms for IEEE 802.11ac and 802.11b/a/g/n standards. The system toolbox provides reference designs to enable exploration of baseband specifications, and demodulate and recover signals.

News ID 3582

ADLINK: new release of SEMA Intelligent Middleware

ADLINK announced availability of the latest version of its remote management middleware tool, SEMA 3.0, which is able to monitor and collect system performance and status information from distributed devices in a timely, flexible and precise manner. New functionality offered in SEMA 3.0 enhances the already comprehensive feature set of the existing, proven SEMA solution. Improved reporting and monitoring functions show detailed information about distributed device CPU, system memory and network interface.

News ID 3570

Green Hills: product and services portfolio supports TI Sitara AM57x

Green Hills Software has announced early support of its industrial safety and security products featuring the safety-certified INTEGRITY real-time operating system for the new Sitara AM57x family of processors from Texas Instruments. The Green Hills product and services portfolio also includes software development tools, cryptographic security products and safety services that when combined, enable device manufacturers to create and deploy secure and safe products for industrial control, factory communication, and smart grid technologies.

News ID 3568

Microchip enables cost-efficient CI+ based Pay TV in automotive infotainment

Microchip announced that system designers using the de-facto industry standard, MOST technology, in their automotive infotainment networks can now leverage Microchip's broad product portfolio of MOST networking products to quickly bring cost-efficient CI+-based Pay TV to their cars. The MOST Cooperation recently released its latest MOST Stream Transmission Specification, which includes support for the MOST CI+ Interim License Agreement issued by CI Plus LLP.

News ID 3542

Rigol: options for oscilloscopes free of charge

Rigol Technologies extend the capability of their Mid Range Oscilloscope Series MSO/DS2000A and offer all options for free when customers buy a new oscilloscope. The options included are Decoding Serial Buses RS232/UART, I2C, SPI and CAN, as well as Memory extension up to 56 Mpts and Advanced Trigger RUNT, Duration, Nth Edge, Time Out etc. These extensions are also available for the installed base of instruments in the field.

News ID 3533

Langer: near-field probe with high resolution up to 10 GHz

The SX probe heads' high measurement resolution allows the developer to pinpoint RF sources of between 1 GHz and 10 GHz on densely packed printed circuit boards or on IC pins. The handy compact pin shape of the EMC near-field probes from Langer EMV-Technik GmbH provides the developer with convenient working conditions on the respective PCB.

News ID 3532

■ PragmaDev lauches new version of its modeling and testing tool

PragmaDev launches PragmaDev Studio a new generation of its modeling and testing tools. As a marker this major version comes with new logos for the company and for the different products. The new tool set PragmaDev Studio V5.0 is backward compatible with the former PragmaDev Real Time Developer Studio V4.6 product.

News ID 3523

■ Lynx Software joins Internet of Things Security Foundation

Lynx Software Technologies has joined the recently launched Internet of Things Security Foundation (IoTSF) to support its vision of delivering a safe Internet of Things environment for all. The IoTSF is a non-profit, technology neutral body, which will take a system wide, holistic perspective on IoT security best practice. It is not a standards body but intends to work collaboratively with existing standards and other consortia "by default".

News ID 3508

■ Wind River introduces Wind River Linux 8

Wind River introduced the latest version of Wind River Linux. Wind River Linux 8 brings together the flexibility and interoperability of open source along with improved user experience and scalability for addressing the opportunities and challenges of IoT. The company also introduced new features for Wind River Open Virtualization.

News ID 3505

■ WITTENSTEIN: SafeRTOS to support Power Architecture cores

WITTENSTEIN high integrity systems has extended its Safety Critical Real Time Operating System, SafeRTOS, to include support for Power Architecture cores, for use in Medical and Industrial applications. SafeRTOS enables dual and multicore Power Architecture software designers to create seamless, mixed safety criticality designs quickly and efficiently. Due to its small size and its safety critical credentials, SafeRTOS is ideally suited for use on the primary core.

News ID 3478

■ LDRA: tool suite features advanced code checker for CERT C compliance

LDRA announced that its TBsecure module within the LDRA tool suite provides the industry's most comprehensive automated support for the Carnegie Mellon Software Engineering Institute CERT C Secure Coding Standard. With checks for more than 200 CERT C rules, TBsecure helps developers identify more software safety and security vulnerabilities than any other static analysis tool available today.

News ID 3526

■ PRQA: MKTM set to achieve EN 50128 certification using QA·C

QA·C with MISRA C compliance module and the EN 50128 safety manual for the rail industry will be used by MKTM, an independent supplier of signal and safety product solutions for the railway industry. Until recently software development has not been MKTM's main focus but given their expertise in engineering for transportation networks they are expanding their portfolio.

News ID 3498

■ Rohde & Schwarz: end-to-end tester for V2X applications of tomorrow

The V2X end-to-end tester for vehicle-to-vehicle (V2V) and vehicle-to-infrastructure (V2I) applications is based on the fully automated R&S TS-ITS100 RF conformance test system from Rohde & Schwarz. The RF conformance test system is augmented by the Vector CANoe application and communications test system, which monitors radiocommunications and internal vehicle buses and even simulates some of them.

News ID 3491

■ TI collaborates with Microsoft to speed IoT development

Texas Instruments announced three low-cost evaluation kits based on its embedded processors supporting Microsoft Azure Certified for Internet of Things. As one of the first semiconductor vendors with certified wireless microcontroller and processor-based evaluation kits ready to work with the Microsoft Azure IoT Suite, TI is uniquely positioned to help developers begin IoT application development within minutes.

News ID 3485

■ Conrad expands its range of VOLTCRAFT digital storage oscilloscopes

Conrad Business Supplies has added two new professional entry-level products to its in-house designed family of DSO-1000D VOLTCRAFT digital storage oscilloscopes. The DSO-1104D and DSO-1074D are four channel instruments and are ideally suited for users seeking affordable devices for visualising electrical magnitudes and signals.

News ID 3494

■ Mouser updates their Medical Applications Site

Mouser Electronics announced new enhancements to their Medical Applications site, one of Mouser's Applications & Technologies sites. Mouser's updated application site provides developers with the resources they need to learn about the latest advances in medical technology, and the newest products available from Mouser Electronics for selecting and building medical technology systems.

News ID 3524

■ SEGGER: new version of TCP/IP stack supports IPv6 protocol suite

SEGGER announces the availability of an enhanced version of its TCP/IP stack with support for the IPv6 protocol suite. The new features expand embOS/IP's capabilities to meet the requirements of the Internet of Things and to cope with the exponential growth of connected devices. Because embOS/IP is now a dual-mode stack, existing users can easily enhance their product with IPv6 whilst maintaining full compatibility with their existing IPv4 source code and protocols.

News ID 3479

■ Renesas: CANopen protocol stack for latest Renesas' 32-bit RX231 MCUs

Renesas Electronics Europe announced the availability of a highly efficient CANopen protocol stack for Renesas' smart 32-bit RX231 MCUs. Renesas ported the widely used and popular CANopen software stack in cooperation with its business partner port. The Renesas RX231 series offers a family of devices with large on-chip SRAM of up to 64 KB and up to 512 kB of on-chip flash, paired with one Controller Area Network (CAN) interface, which is fully compliant with the CAN 2.0B and the ISO11898-1 (standard and extended frames) standards, and is therefore well-suited to industrial and consumer applications requiring CAN interfaces.

News ID 3592

■ Freescale runs Thread and Bluetooth Smart from a single Wireless MCU

Freescale Semiconductor introduces the new Kinetis KW41Z – the industry's first multi-mode radio MCU to support concurrent operation of IEEE 802.15.4 Thread and Bluetooth Smart/BLE connectivity while hosting associated applications. The Kinetis KW41Z MCU platform provides a comprehensive solution for applications and connectivity in a single package. An expansion of Freescale's Kinetis KW40Z family of wireless MCUs, the new KW41Z MCU features extended memory – up to 512K Flash and 128K RAM – allowing multiple networking stacks to run on a single device and enabling true multiprotocol designs.

News ID 3546

■ ARM offers free access to Cortex-M0 processor IP

ARM is making it far easier to design, prototype and produce SoC components by offering free pre-commercialization use of ARM Cortex-M0 processor IP and low-cost FPGA prototyping. The package will enable the design, simulation and testing of new SoCs using a pre-configured Cortex-M0 processor without incurring the capital costs typically associated with up-front licensing.

News ID 3543

ADI: electrometer-grade amplifier improves accuracy of chemical analysis instruments

Analog Devices introduced an electrometer-grade operational amplifier that enables chemical analysis instruments to achieve the highest level of precision and data repeatability over a wider temperature range in a compact solution that reduces overall bill of materials and design footprint.

News ID 3602

R&S: BTC broadcast test center features new compliance tests

The R&S BTC test center and R&S AVBrun compliance test software have been in use by the National Broadcast and Telecommunications Commission (NBTC) in Thailand and the Vietnam Telecommunication Authority (VNTA) since June 2015. In Thailand, the R&S BTC is being used to test DVB-T2 receivers and prepare for rollout.

News ID 3465

Innodisk: cable-less SATA power technology for disk-on-module SSDs

Innodisk announces its latest series of SATADOM disk-on-module SSDs featuring a new cable-less power technology. This latest series of SATADOM and ServerDOM come in the same compact form factor but feature a new way of delivering power to the flash drive directly through the SATA connector itself for less clutter and superior reliability. The new patented Pin 8 technology powers a series of SATADOM drives which will come in a variety of compact form factors and flash flavors including SLC, MLC and iSLC, as well as DRAM-less versions for 100% data integrity in the face of power loss.

News ID 3475

Rogue Wave Software releases new dynamic analysis product

Rogue Wave Software introduced the next generation of dynamic analysis for data-intensive commercial applications with their release of CodeDynamics. CodeDynamics expands the reach of multithreaded debugging from the high performance computing environment into the commercial market.

News ID 3600

Microsemi: FPGA cores with strong DPA countermeasures for cryptography users

Microsemi and The Athena Group announced a comprehensive portfolio of IP cores with state-of-the-art side channel analysis and differential power analysis countermeasures. The new portfolio, based on Athena's TeraFire cryptographic microprocessor family, is designed for users of Microsemi's award-winning SmartFusion2 system-on-chip FPGAs and IGLOO2 FPGAs.

News ID 3589

Green Hills supports new Renesas RZ/G series devices

Green Hills Software has announced support for the Renesas RZ/G microprocessor devices with the Green Hills ISO 26262 and IEC 61508-certified INTEGRITY real-time operating system. Green Hills Software also announced its continuing support for the Renesas RH850 family of MCUs with the Green Hills ISO 26262-certified MULTI IDE.

News ID 3540

Xilinx: Vivado Design Suite 2015.3 with new plug-and-play IP sub-systems

Xilinx announced the 2015.3 release of the Vivado Design Suite. The new release enables platform and system developers to increase productivity and decrease development costs by enabling design teams to work at a higher level of abstraction with new market-tailored, plug-and-play IP sub-systems.

News ID 3520

AMD: R-series processor supports full 4K decode and DirectX 12

AMD announced new AMD Embedded R-Series SOC processors that establish performance leadership across a targeted range of embedded application market requirements for digital signage, retail signage, medical imaging, electronic gaming, media storage and communications and networking. Designed for demanding embedded needs, the processors incorporate the newest AMD 64-bit x86 CPU core plus third-generation Graphics Core Next GPU architecture, and state-of-the-art power management for reduced energy consumption.

News ID 3588

Mouser: small, low-power MAX3262x microcontrollers from Maxim

Mouser is now stocking the MAX32620/MAX32621 microcontrollers from Maxim Integrated. The MAX3262x devices are based on the 32-bit RISC ARM Cortex-M4F microcontroller with a floating point unit, ideally suited for the emerging category of medical and fitness applications. Both devices include 2MBytes of flash and 256kbits of SRAM, with the architecture combining high-efficiency signal-processing functionality with low cost, and ease of use.

News ID 3469

ST starts volume production of DSI-ready STM32 microcontrollers

A richly featured development ecosystem including boards and software support heralds the start of volume production for STMicroelectronics' high-performance STM32F469/479 microcontrollers, the world's first MCUs to integrate the MIPI-DSI controller.

News ID 3594

boards & solutions & ECE

Editors
Jürgen Hübner
phone +49(0)8092-2477413
fax +49(0)8092-2477429
jh@iccmedia.com

Wolfgang Patelay
wp@iccmedia.com

Tony Devereux
devrex@teyboyz.freeserve.co.uk

For Reader Inquiries and Address Changes **please contact:**
info@iccmedia.com

Sales & Marketing Director
Manfred Blumoser
phone +49(0)8092-2477411
fax +49(0)8092-2477429
mb@iccmedia.com

Claudia Mellein
cm@iccmedia.com

Christiane Lockner
cl@iccmedia.com

Sales Office - UK and USA, Benelux, Scandinavia
Blue Sky Communications
Malcolm Cameron
21 Cliffe Avenue
Westbrook,
Margate, Kent CT9 5DU, UK
phone +44 (0)77 88-10 84 11
fax +44 (0)80 82-8010 57
mc@blue-sky-communications.com

Sales Office - Asia
Jean Cheng, *jean@i-media.com.tw*
Vivian Hung, *vivian@i-media.com.tw*
Innovative Media Information & Services
7F-3, No. 26, Sec. 2, Ming-Quan East Rd.
Taipei 104 Taiwan
phone +886 2 2563 1186

Head Office

ICC Media

ICC Media GmbH
Rauwagnerstr. 5
85560 Ebersberg / Germany

Editorial Office UK
36a Blackacre Road
Theydon Bois
Essex, CM16 7LU

TI: small and low power battery management solution for wearables and IoT products

Texas Instruments introduced a highly integrated battery management solution presenting the industry's lowest quiescent current at 700-nA with the buck converter, operating at 1.8V. The bq25120 features a linear charger, configurable LDO, load switch, buck converter, pushbutton control and battery voltage monitor all in one. The solution supports batteries from 3.6-V to 4.65-V, and fast charge currents from 5-mA to 300-mA, allowing wearables and industrial Internet of Things applications to always be on without draining the battery.

News ID 3500

Mouser: ultra-low-power STM32L4 microcontrollers

Mouser Electronics is now stocking the new STM32L4 series 32-bit microcontrollers from STMicroelectronics. These ultra-low-power STM32L4 32-bit microcontrollers are based on the high-performance ARM Cortex-M4 32-bit RISC core operating at a frequency of up to 80MHz. The STM32L4 micro-controllers leverage ST's low power technologies including voltage scaling to balance power consumption with processing demand and include seven low-power management modes to give designers flexibility to optimize power consumption in a broad range of applications.

News ID 3458

Cadence: memory model for LPDDR5 simplifies SoC verification

Cadence Design Systems announced the Cadence Memory Model for the LPDDR5 standard. This new verification IP product enables engineers to verify that system-on-chip designs are compliant with the JEDEC interface standard, and that they can operate correctly in a system with the actual memory components. Validation of designs using the LPDDR5 memory model reduces the risk of mistakes, rework and delayed production, leading to faster production ramp-up and higher product quality.

News ID 3536

Fujitsu: extended lifecycle boards are particularly energy-efficient

For semi-industrial use Fujitsu provides the new mainboard D3402-B and D3417-B of the Extended Lifecycle Series. These models support the new, 6th generation Intel Core processors. Like the mainboards of the Classic Desktop Series they also allow the use of DDR4 memory, which is characterized by a significant increase in performance. The 100er series of Intel chipsets enables the use of more powerful CPUs with a simultaneous reduction of power consumption.

News ID 3581

Rutronik includes product portfolio of International Rectifier

With effect from August 01, 2015, Rutronik Elektronische Bauelemente is also a franchise distributor for the product portfolio of International Rectifier (IR). Following the acquisition by Infineon of International Rectifier, Infineon and Rutronik have expanded their partnership to include the additional IR product portfolio.

News ID 3470

MSC: monolithic high-speed CMOS DDR3L SDRAM from Alliance

MSC Technologies presents a new monolithic high-speed, low-voltage CMOS double data rate 3 synchronous DRAM (DDR3L SDRAM) with an 8-Gb density in the 96-ball, 9-mm by 14-mm, lead-free FBGA package from Alliance. Featuring state-of-the art silicon provided by Micron Technology, Inc., the AS4C512M16D3L (512M x 16) offers a double data rate architecture for extremely fast transfer rates of up to 1600 Mbps/pin and clock rates of 800 MHz.

News ID 3459

Infineon Security Partner Network makes IoT security easily accessible

Infineon Technologies leaps forward in bringing security to the Internet of Things. The company launched the Infineon Security Partner Network (ISPN) to make proven semiconductor-based security easily accessible to the growing number of manufacturers of connected devices and systems. The ISPN connects IoT security players with outstanding expertise in specific applications and markets.

News ID 3517

FTDI Chip: hardware supports development and implementation of FT90X Super-Bridge MCUs

FTDI Chip has introduced a series of easy-to-utilize modules to facilitate the evaluation, development and subsequent implementation of its 32-bit FT90X Super-Bridge MCUs. This will mean that engineers in the embedded space are better positioned to benefit from the industry-leading performance levels and extensive connectivity that these highly advanced ICs are able to deliver.

News ID 3554

Telit selected for smart utility meter project in the Netherlands

Telit has secured a commitment valued at more than US$30 million to supply CDMA 450 MHz modules to one of the leading smart meter vendors for a Netherlands project. The Telit IoT modules are at the core of a new generation of smart electricity meters that Dutch utility companies will deploy nationwide over five years starting in 2016 with most of the shipments front-loaded in the initial years.

News ID 3528

Advertisers Index

Toshiba: three new microcontrollers optimised for USB

Toshiba Electronics Europe has launched three new microcontrollers optimised for use in USB devices. The TMPM066FWUG, TMPM067FWQG, and TMPM068FWXBG are the latest additions to Toshiba's ARM Cortex-M0 core based TX00 series and feature integrated USB controllers.

News ID 3561

Silicon Labs meets VOIP market demand with PROSLIC devices

Silicon Labs introduced a new family of subscriber line interface circuits (SLICs) offering the lowest power consumption, smallest footprint, and highest levels of integration and programmability for the voice-over-IP (VoIP) gateway market. Silicon Labs' single- and dual-channel Si32x8x ProSLIC family provides a best-in-class subscriber line interface solution for a wide range of VoIP customer premises equipment including cable gateways, xDSL integrated access devices, xPON optical network terminals, fiber to the home (FTTH), fiber to the building (FTTB) and wireless fixed terminals.

News ID 3571