SiC Solution for Industrial Auxilliary Power Supply

05.12.2017

Christian Felgemacher
Application Engineer – Power Systems Department

ROHM’s Power Devices

ROHM’s power item lineup covers wafers/bare dies, discrete packages, module, ICs and Intelligent Power Modules

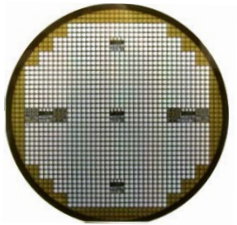

Discrete

TO220
TO247/3PF
D-Pak / D2-Pak
etc…

Power Module

Case type
(Full SiC Module)
Mold type
IPM etc…

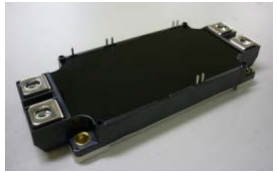

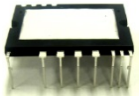

Device

Today we focus on an auxilliary supply solution around discrete SiC MOSFETs and driving/control IC

FET

FRD
SBD
Shunt Resistor

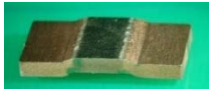

ICs

Gate driver
Temperature/High Voltage monitor
ACDC etc…

ROHM‘s power devices

50+ years experience in Si Transistors/Diodes, 15+ years in WBG Semiconductors.

Material	Si				SiC		GaN
Device	SJ MOSFET	Hybrid MOSFET	FRD	IGBT	SBD	MOSFET	HEMT
Breakdown Voltage	500V~ 800V	600V*	300V 600V 1200V*	430V 650V 1200V*	650V 1200V 1700V	650V 1200V 1700V	R&D*

*in development

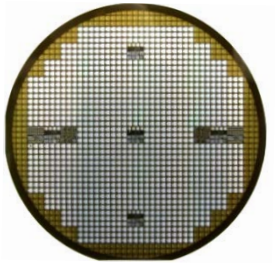




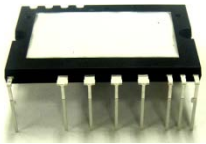


Myths of SiC MOSFET technology

Expensive

Device cost may be higher, but **overall system cost equal or lower**

Application advantages vs. Si components

Lower Resistance

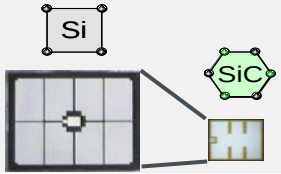

Smaller Size / Higher Efficiency

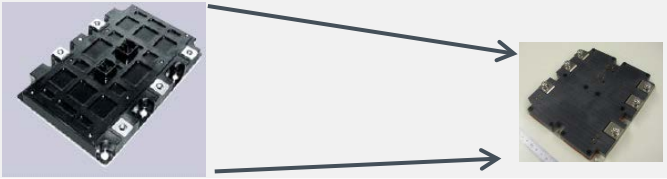

Higher Frequency Operation

Smaller Passive Components

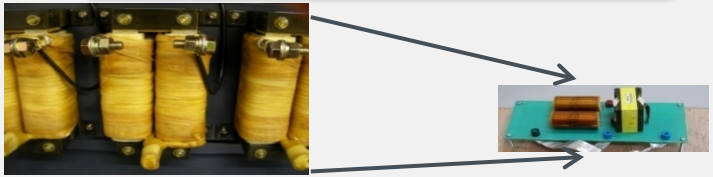

Higher Temp Operation

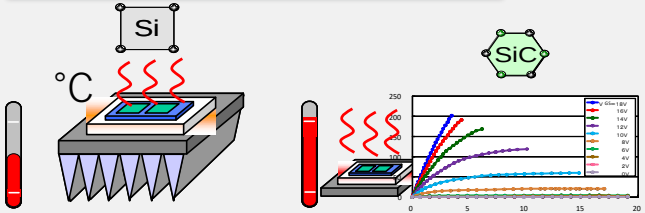

Simpler Cooling System

Down sizing

Myths of SiC MOSFET technology

Expensive

Device cost may be higher, but **overall system cost equal or lower**

Not reliable

Extensive reliability testing done, comparable to Si-based devices

Reliability aspects of SiC Trench MOSFETs

Reliability tests for ROHM Trench MOSFETs

Test	IEC Standard	Conditions	Si	SiC	Comments SiC
High Temperature Reverse Bias	60747	1000 h @ 95% $V_{ds,max}$, T_{amb}= 125..145°C	✓	✓	@ 100% $V_{ds,max}$ T_{amb}= $T_{j,max}$ =175°C
High Temperature Gate Bias	[illegible]	1000 h @ ±$V_{GS,max}$, [illegible]	✓	✓	
High Humidity High Temperature Reverse Bias	6[illegible]	[illegible]	[illegible]	[illegible]	$V_{ds,max}$=100V
High Temperature Storage	6[illegible]	[illegible]	[illegible]	[illegible]	
Low Temperature Storage	60068-2-1	1000 h @ $T_{STG,min}$	✓	✓	
Thermal Cycle	60068-2-14	100 cycles $T_{STG,max}$ - $T_{STG,min}$	✓	✓	

SiC 3 Gen. MOSFETs undergo reliability tests similar to those for Si MOSFETs and IGBTs

➔ Automotive qualification soon to be finished

Myths of SiC MOSFET technology

Expensive

Device cost may be higher, but **overall system cost equal or lower**

Not reliable

Extensive reliability testing done, comparable to Si-based devices

Complex

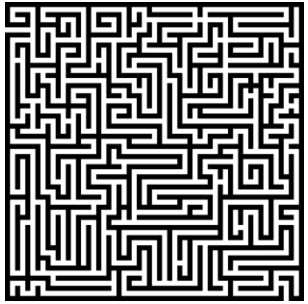

Use of SiC MOSFETs can simplify circuit design

Todays focus:
Simple solution for aux supply

Auxiliary power supplies for industrial applications

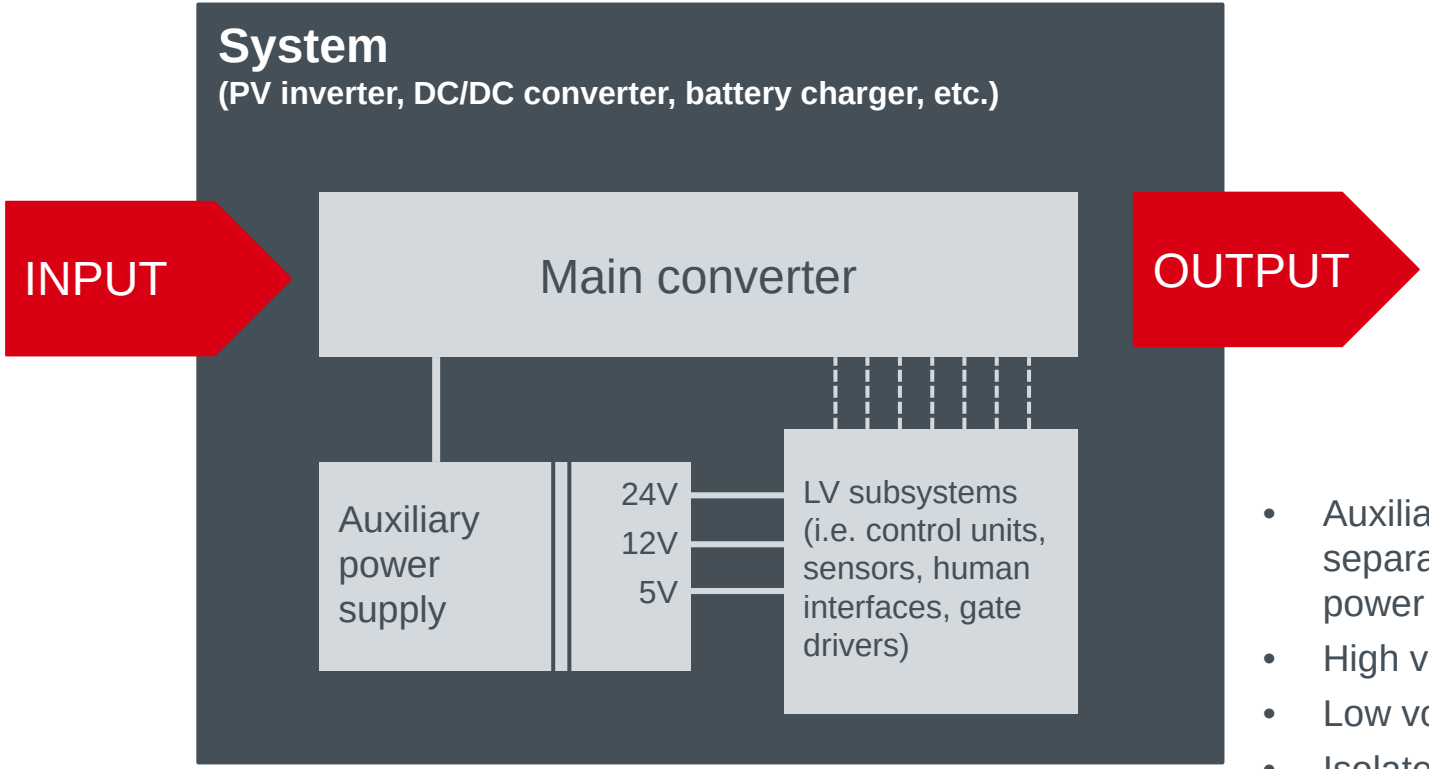

- Auxiliary voltage separated from the main power path
- High voltage input
- Low voltage output
- Isolated

Typical circuit for industrial auxilliary supply

Flyback converter with 3-phase input

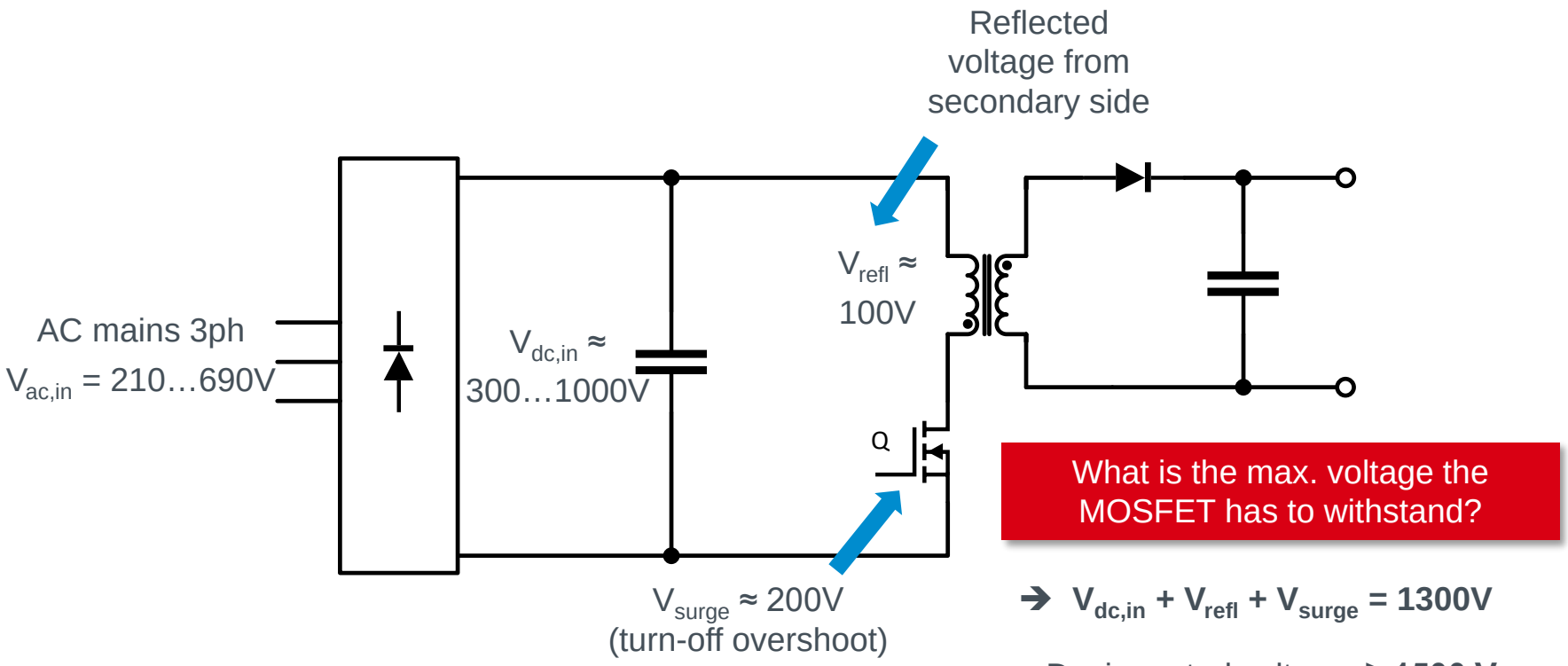

What is the max. voltage the MOSFET has to withstand?

➔ $V_{dc,in} + V_{refl} + V_{surge} = 1300V$

Device rated voltage: **≥ 1500 V**

Typical Si-based solutions

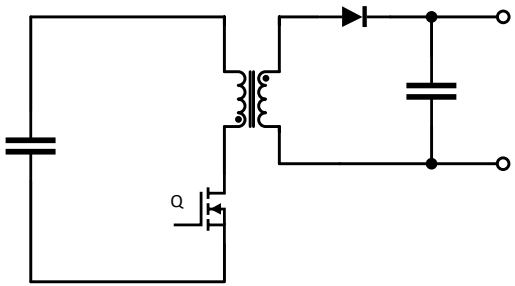

1500V Si MOSFET

e.g. 1500V, 6Ω

- High gate charge Qg (high gate driving losses)
- High leakage current, especially at high temp.
- High conduction losses

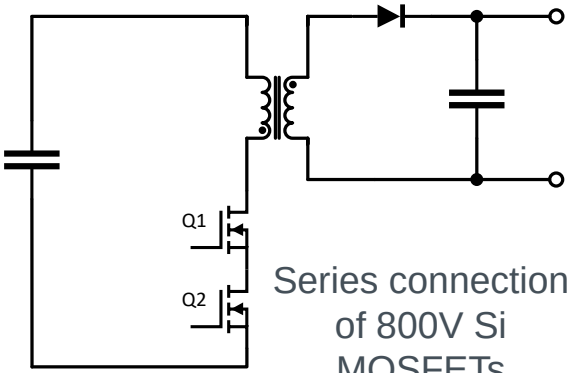

Series connection of 800V Si MOSFETs

- Gate driving circuit more complex
- Static voltage balancing network
- Larger space for the heat sink

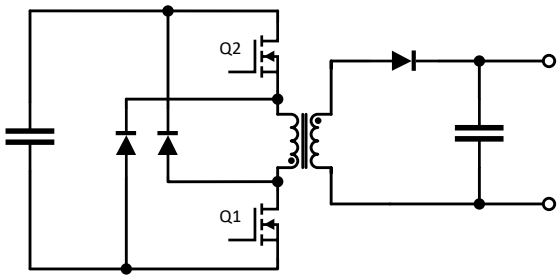

Two-switch flyback topology

- Higher complexity in design and assembly
- Isolated gate driver & power supply for high side
- Larger space for the heat sink

Why use a SiC-MOSFET in this application?

Property	unit	SCT2H12NZ			Si-MOSFET-A			Si-MOSFET-B			Si-MOSFET-C		
		min	typ	max	min	typ	max	min	typ	max	min	typ	max
V(BR)DSS	V	1700			1500			1500			1500		
Id @ 25°C	A		3,7				2			2,5			6
Rds(on)@25°C	Ω		1,15	1,5		9	12		6	9		2,2	3
Idss@25°C	µA		0,1	10			500			10			1000
Ciss	pF		184			990			939			2025	
Rg	Ω		64						4				
Qg	nC		14						29,3			114	
Rth(j-c)	K/W		3,32	4,32						2			

- SiC MOSFET has lower $R_{DS(on)}$
- Also, Qg and capacitance are much reduced

- High gate resistance of SiC device demands a low-impedance gate drive

Why use a SiC-MOSFET in this application?

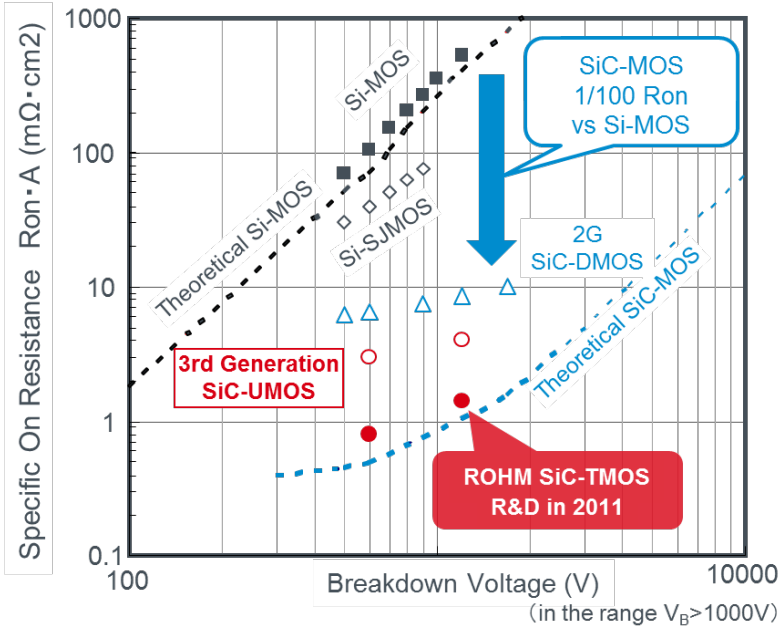

- The underlying advantage is the significantly reduced $R_{DS(on)}$·A value of SiC MOSFETs vs Si-MOS

ROHM SiC-MOSFETs for Auxiliary Power Supplies

Lineup 1700V SiC MOSFET devices:

	Part No.	V_{DS}[V]	$R_{DSon\ typ}$[mΩ] @Vgs=18V	I_D[A] @T_C=25°C	I_D[A] @T_C=100°C	T_{jmax}[° C]	Package	Die Part No.
	SCT2H12NZ	1700	1150	3,7	2,6	175	TO-3PFM	-
NEW	SCT2H12NY	1700	1150	4,0	2,9	175	TO-268-2L	-
NEW	SCT2750NY	1700	750	5,9	4,0	175	TO-268-2L	-
		1700	100	34	-	175	bare die	S2409

TO-3PFM

TO-268-2L

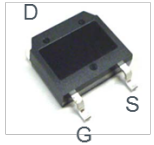

SCT series

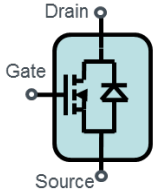

MOSFET

SiC MOSFET in auxiliary power supplies

SiC-based solution with 1700V MOSFET and single-switch flyback topology

- Single switch
- Isolated package
- Control IC **BD768xFJ**
- Heat sink not mandatory if <40W

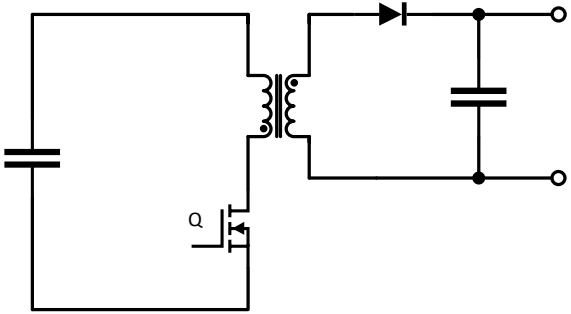

TO-268 2L

0.75Ω,
1.15Ω

TO-3PFM

1.15Ω

SCT2H12NZ

Input:	300-900 Vdc
Output:	12 Vdc
Power:	40 W (no heat sink)
Sw. freq.:	90…120 kHz
Efficiency:	85% (300 Vdc), 83% (700 Vdc)

ROHM evaluation board available

BD7682FJ_EVK_301

BD768xFJ

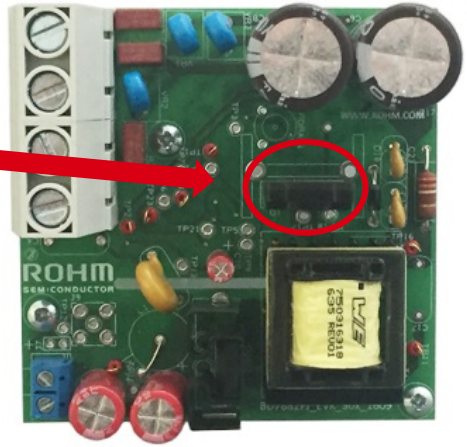

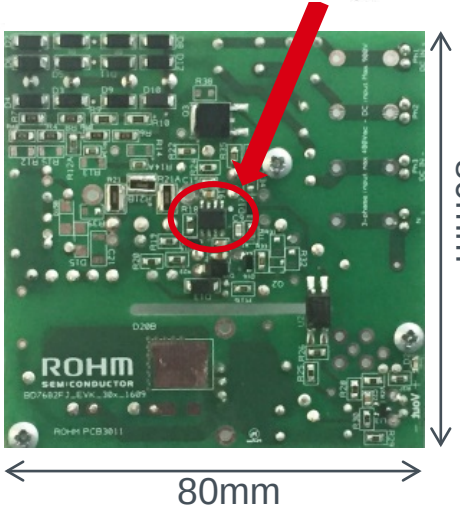

BD768xFJ-LB's features

Feature

- Optimum System for driving SiC MOSFET
- Quasi – Resonant DC/DC convertor
- Low VCC current（19uA@VCC=18.5V）
- Burst function at light load
- Max Frequency Controlled（120kHz）
- VCC Over Voltage Protection
- VCC Under Voltage Locked Out
- Brown IN/OUT Function
- DC/DC Soft Start
- DC/DC Cycle by Cycle current limiter
- 250nsec Leading-Edge Blanking
- ZT Trigger mask function
- ZT Over Voltage Protection
- Over Load Protection (128ms Timer) ●MASK Function

Application circuit

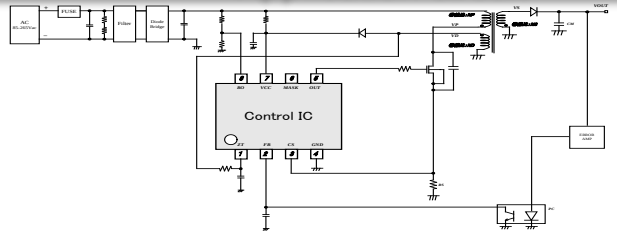

Specification

- Operating VCC Range : 15.0V ~ 27.5V
- DCDC Max Frequency : 120kHz
- Operating current 800 uA
- Operating Temperature: - 40deg. to +105deg.

PIN place ／ Package

NO.	Pin	
1	ZT	Zero Current Detect pin
2	FB	Feedback pin
3	CS	Current Sense pin
4	GND	GND pin
5	OUT	MOSFET drive pin
6	MASK	External TR drive
7	VCC	Power Supply pin
8	BO	Broun IN/OUT monitor pin

SOP-J8S
6.0mm×4.9mm :
1.27mm pitch
<TYP>

Application

Factory Automation, Adaptor, Smart Meter

Line up

	FBOLP	VCCOVP
BD7682FJ	AutoRestart	Latch
BD7683FJ	Latch	Latch
BD7684FJ	AutoRestart	AutoRestart
BD7685FJ	Latch	AutoRestart

SiC MOSFET in auxiliary power supplies

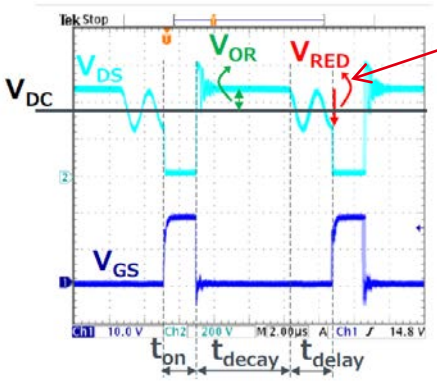

Reduced effective switching voltage leads to lower turn-on loss

ROHM evaluation board BD7682FJ_EVK_301

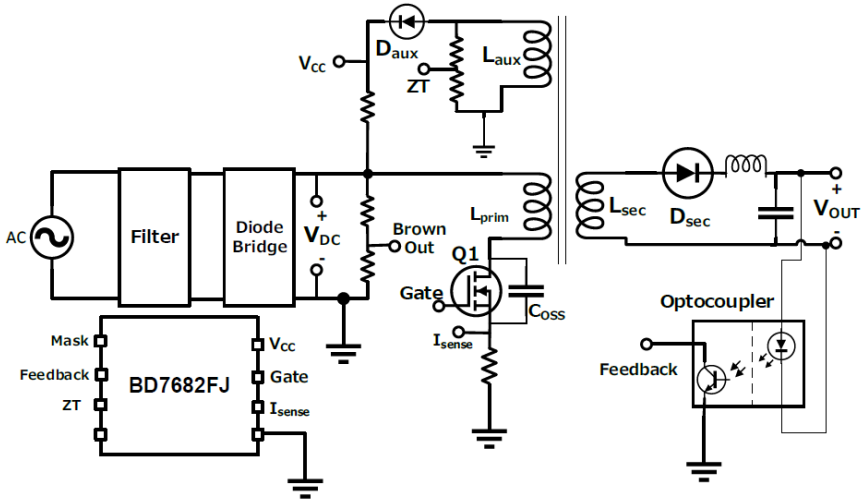

Control IC for SiC based solution: **BD768xFJ**

- Implements quasi-resonant switching to minimise dynamic losses and achieve low noise
- Suitable drive voltage for SiC MOSFET

SiC MOSFET in auxiliary power supplies

Waveforms of flyback switch for different operating contitions:

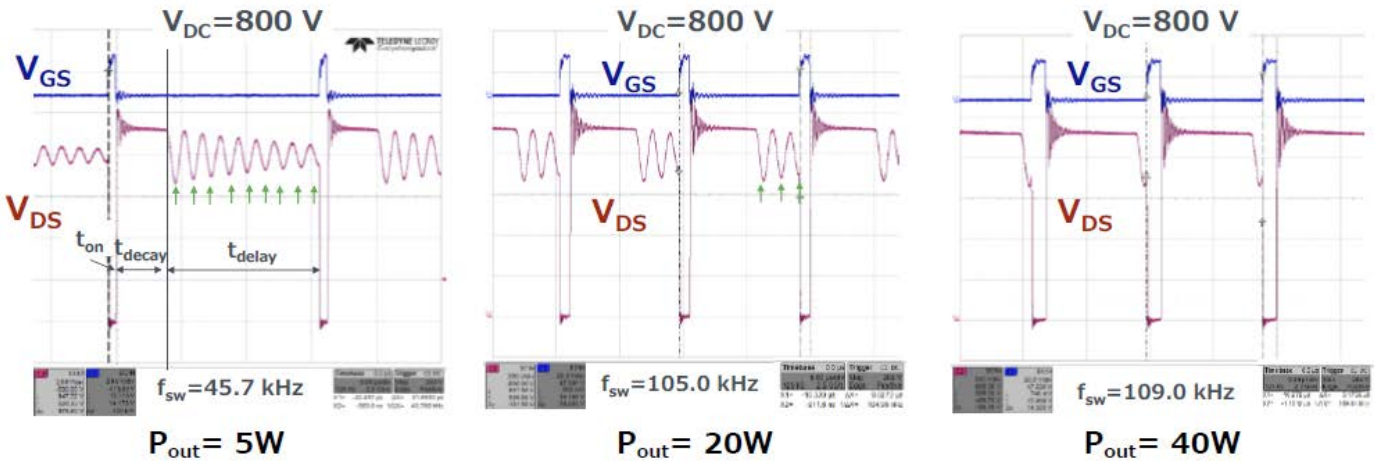

- Quasi-resonant operation is maintained across the output power range
- As the delay time decreases the effective switching frequency increases with increased load

SiC MOSFET in auxiliary power supplies

Operation at 40W without heat sink ➔
(with heat sink ca. 100W possible)

V_{out} = 12 V_{DC}

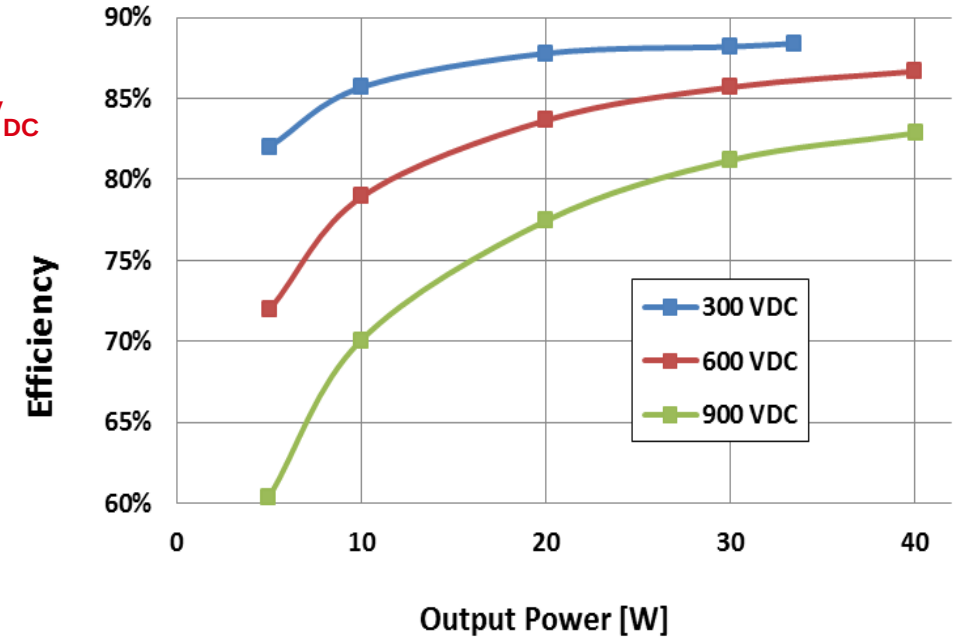

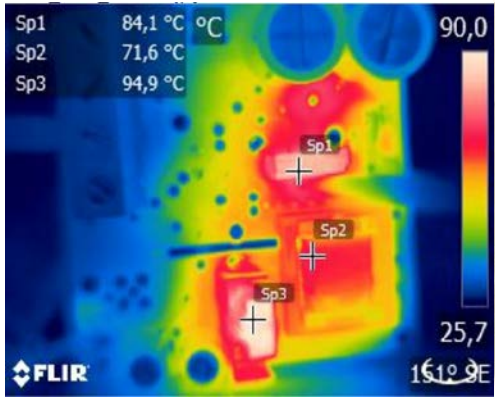

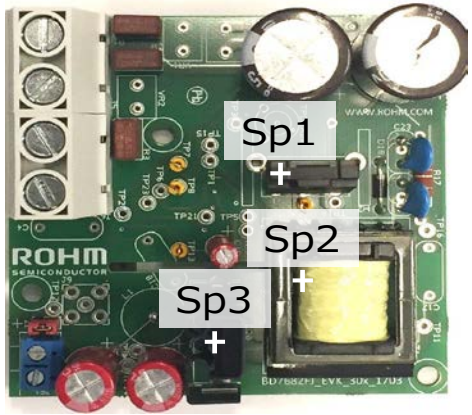

Next step: Integration of SiC MOSFET and controller

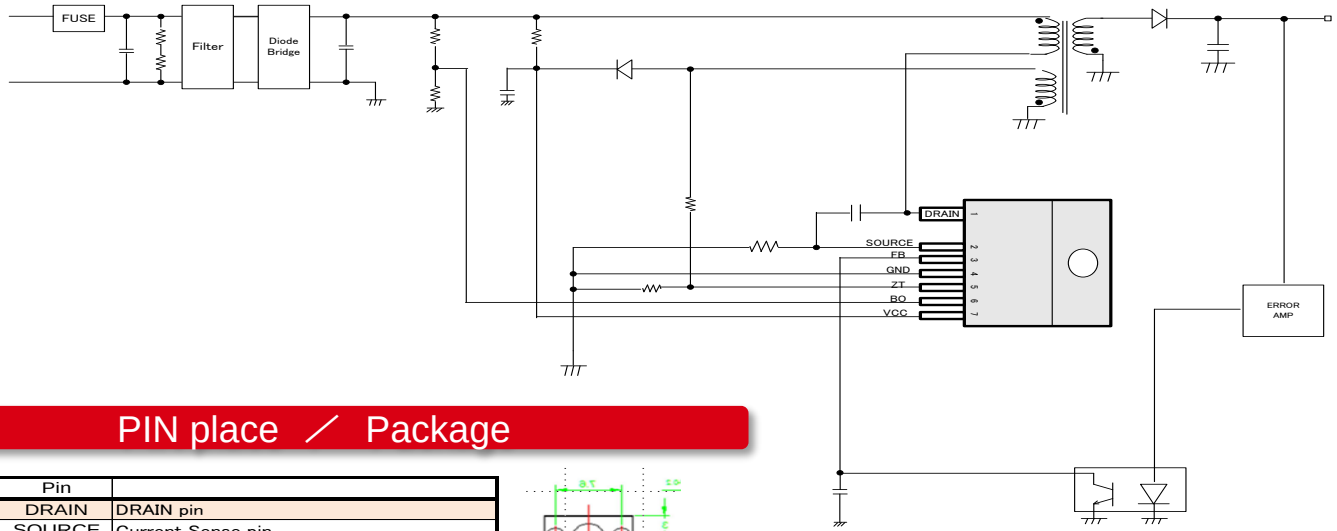

PIN place ／ Package

NO.	Pin	
1	DRAIN	DRAIN pin
2	SOURCE	Current Sense pin
3	FB	Feedback pin
4	GND	GND pin
5	ZT	Zero Current Detect pin
6	BO	Broun IN/OUT monitor pin
7	VCC	Power Supply pin

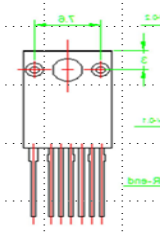

Application

Factory Automation, Adaptor, Smart Meter

Target Specification

- Operating VCC Range : 15.0V ~ 29.5V
- Operating DRAIN Range ~ 1700V
- Drain Current (Continuous) 4A
- Drain Current (Pulsed) 10A
- Drain-Source on resistance ca. 1.6 Ohm
- Power Range (Without Heat-Sink) ca. 30W
- Power Range (With Heat-Sink) ca. 100W

Next step: Integration of SiC MOSFET and controller

Additional features (tbc)

- VCC Over Voltage Protection
- VCC Under Voltage Lock Out
- Soft Start
- Cycle by Cycle current limiting
- Burst function
- Over-load protection
- Brown-out
- Gate voltage clamping

- etc.

Block diagram

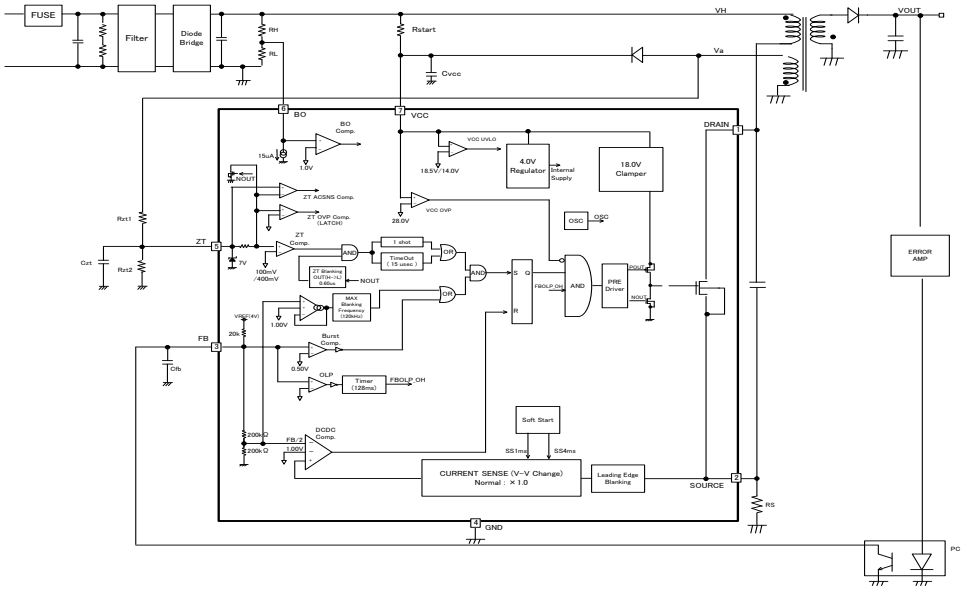

Conclusions

- Auxilliary supply solution using BD768xFJ with 1700V SiC MOSFET is a good alternative to auxilliary supply circuits that today use series connection of Si MOSFETs or complex topologies to achieve the desired blocking voltage level.
- Taking advantage of SiC device benefits cost advantages can be realised on the system level.
- The next development step for SiC based auxilliary supply solutions is integration of the control IC and power switch in one package.

ROHM SEMICONDUCTOR

ROHM Semiconductor GmbH